CONTROLLI

Catalogue #1

Valves & Actuators
for **HVAC systems**
and industrial processes

CONTROLLI VALVES & ACTUATORS

ENERGY EFFICIENCY

2016/2017

CONTROLLI

Controllers & field devices for HVAC

COMPANY PROFILE

CONTROLLI was established in Genoa in 1936 and was the first Italian company to manufacture a complete range of controllers, actuators and control valves for heating and air-conditioning systems.
Since 1950 the product range was improved by widening the range of control equipments and systems for industrial application.
In the 80s CONTROLLI consolidates its position as the most important Italian manufacturer, with special regard to climate controls, thanks to the development of analogue and digital electronic devices.
In the 90s CONTROLLI gains a position also in the Building Automation market.
From 1996 to July 2005 CONTROLLI has been part of the Invensys multinational group.
From 2005 to August 2011 CONTROLLI has been part of Schneider Electric S.A.

CORE BUSINESS

CONTROLLI core business consists of products and systems for the control and supervision of HVAC plants and industrial processes.
CONTROLLI products are the result of mechanical - electric - electronic technology integration, supported by a 75-years experience in HVAC applications.

MADE IN ITALY

SINCE 1936
A LEADING COMPANY
IN HVAC AND BUILDING
AUTOMATION

PRODUCT QUALITY IS CONTROLLI N°1 COMMITMENT

Controlli is recognised today as an Italian leader in the Building Automation market and a benchmark in the segment of valves and actuators for the HVAC market.
Business with OEMs (Original Equipment Manufacturers) is more than 30% of our turnover. System integration for BMS is part of our business too. Our Building Automation team develops control software for free programmable controllers according to customers' specifications. Since several years we are mainly focusing on cutting-edge solutions aiming at guaranteeing the highest level of comfort but keeping a close eye on energy saving technologies. Some of these technologies refer to: heat metering systems, control devices with wireless communication, circuit balancing and more.

*The port of Genoa

MANUFACTURING SITE

CONTROLLI

An industrial area of 6,000 m2 in Sant'Olcese (Genoa) is CONTROLLI head office. Production is highly automated with robotic devices for the assembly and calibration of mechanical and electronic spare parts and finished products.

It is worth mentioning the robotic plant for processing, mounting and testing of valve bodies and the robotized workcell for assembly, testing and certification of fan-coil valve actuators.

CONTROLLI has adopted the SIX SIGMA procedures, further elevating the quality standard of its products.

CONTROLLI operates under ISO9001-2008 Quality Certificate System. All CONTROLLI valves are PED (Pressure Equipment Directive) compliant.
Products are tested 100%.

FIELDS OF APPLICATION

CONTROLLI

Data Centres

Hotels

Residential

Hospitals

Industrial plants

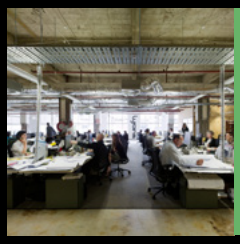

Offices

Schools and Universities

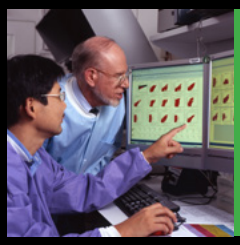

Research Institutes

Public Areas

Pools and Spas

Transporta-tions

Malls

SALES ORGANIZATION

Sales & Marketing Dept. is in Sant'Olcese (Genoa).

Italian sales network consist of Sales-Offices in Milan, Genoa and Rome, 45 representatives and 75 authorised dealers throughout the Italian territory.

Abroad CONTROLLI operates through a widespread network of distributors and agents in Europe, Africa, Middle East, Far East, North and South America. By getting in touch with the nearest CONTROLLI sales point, the customers will find solution to any technical and commercial issue

TECHNICAL SUPPORT

Our offices will provide a continuous technical assistance and support for systems and devices, application information, quotations and wiring diagrams.

Moreover, CONTROLLI holds periodically training courses for different levels of technical expertise and class of customers.

WHERE TO FIND US

CONTROLLI

Controlli S.p.a.
Via Carlo Levi, 52
16010 Sant'Olcese
Genova - Italy

Controlli is located 10 Km north of Genova.

take the A7 highway (genova-milano) and exit at Genova Bolzaneto.
44.4862, 8.9223
Closest Railway Station: Genova Piazza Principe

GENOA AIRPORT ▶ CONTROLLI

A7 Highway	16min 13,7Km

LINATE AIRPORT ▶ CONTROLLI

A7 Highway	1h e 13min 149Km

PISA AIRPORT ▶ CONTROLLI

A12 Highway + E80	1h e 35min 172Km

MALPENSA AIRPORT ▶ CONTROLLI

A7 Highway + E62	1h e 53min 181Km

BERGAMO AIRPORT ▶ CONTROLLI

A7+A4 Highway	2h e 2min 195Km

NICE AIRPORT ▶ CONTROLLI

A10 Highway + E80	2h e 5min 206Km

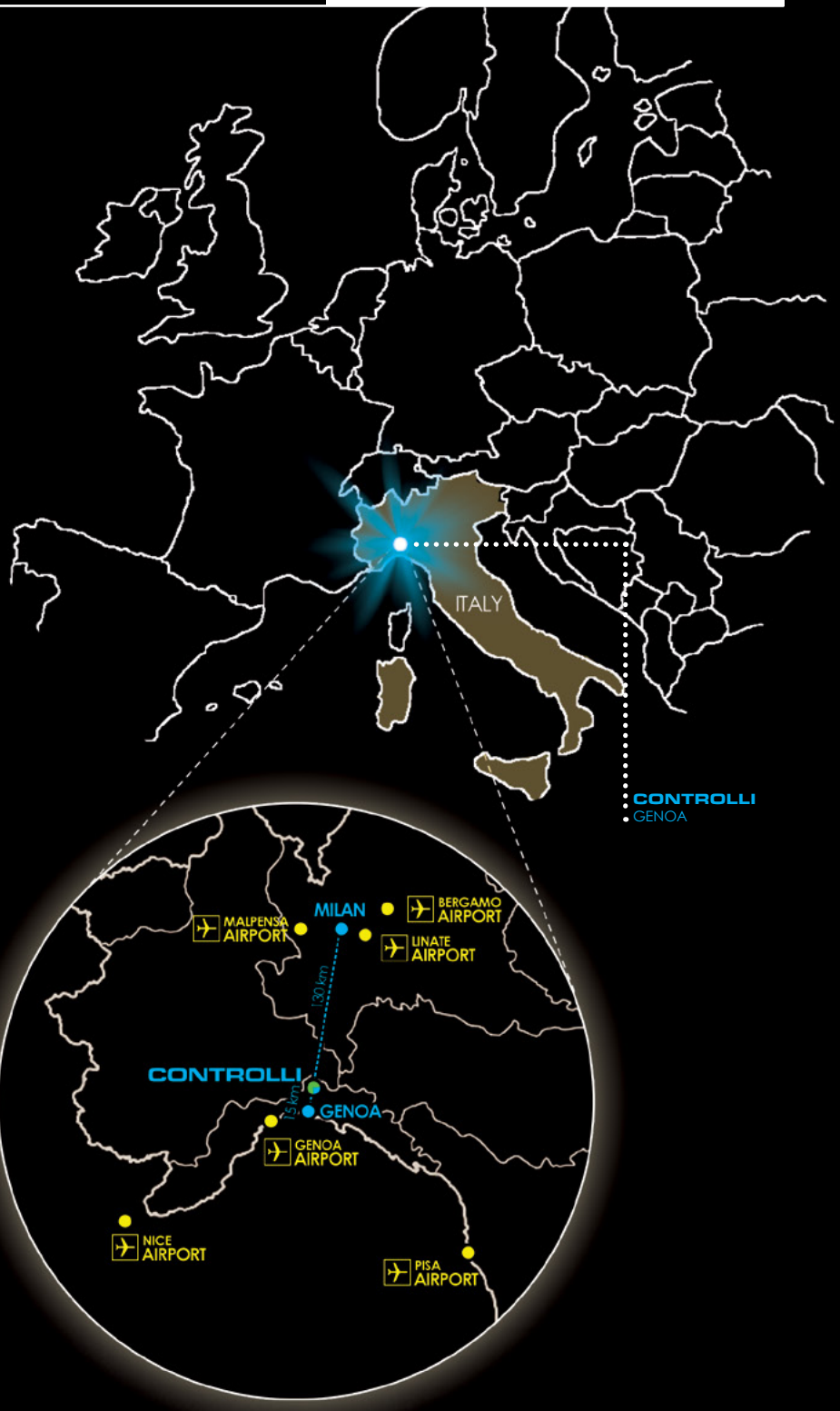

TECHINCAL SUPPORT

CONTROLLI

Controlli provides a series of resources to make it as easy as possible for you to identify the products you need.

DATA SHEETS	Specify manufacturing and technical characteristics of products and their application, installation, wiring connections and start-up instructions.
PRODUCT SELECTION GUIDE	Gives a brief description of Controlli product range according to different applications.
USERS' INSTRUCTIONS	Provide the information for the correct use of the equipment and for its maintenance.
BROCHURES	Advertise single Controlli products or control systems.
APPLICATION DIAGRAMS	Illustrate the most common applications, indicating the equipment of control system, basic system and wiring diagram.
PRICE LIST	Lists the prices and sales conditions.
CATALOGUE	Our product range catalogue is also available on controlli website

APPLICATION ENGINEERING OFFICE	Available for technical information, selection, application and quotations of equipment and complete control systems.
SALES SERVICE	Consisting of our technical staff and authorised assistants for technical support, commissioning, repairs and maintenance.
TECHNICAL TRAINING COURSES	Courses are held periodically for both technical and commercial staff on equipment and control systems. Moreover, there are courses aimed at the users of digital supervision systems.
WEB SITE	Check our total portfolio by visiting www.controlli.eu, which gives direct access to the latest version of all our data sheets.

WEBUP.CONTROLLI.EU

Our customers have free access to our WEBUP online service, where they can check the updated situation for any order, shipment, as well as download documents and invoices.

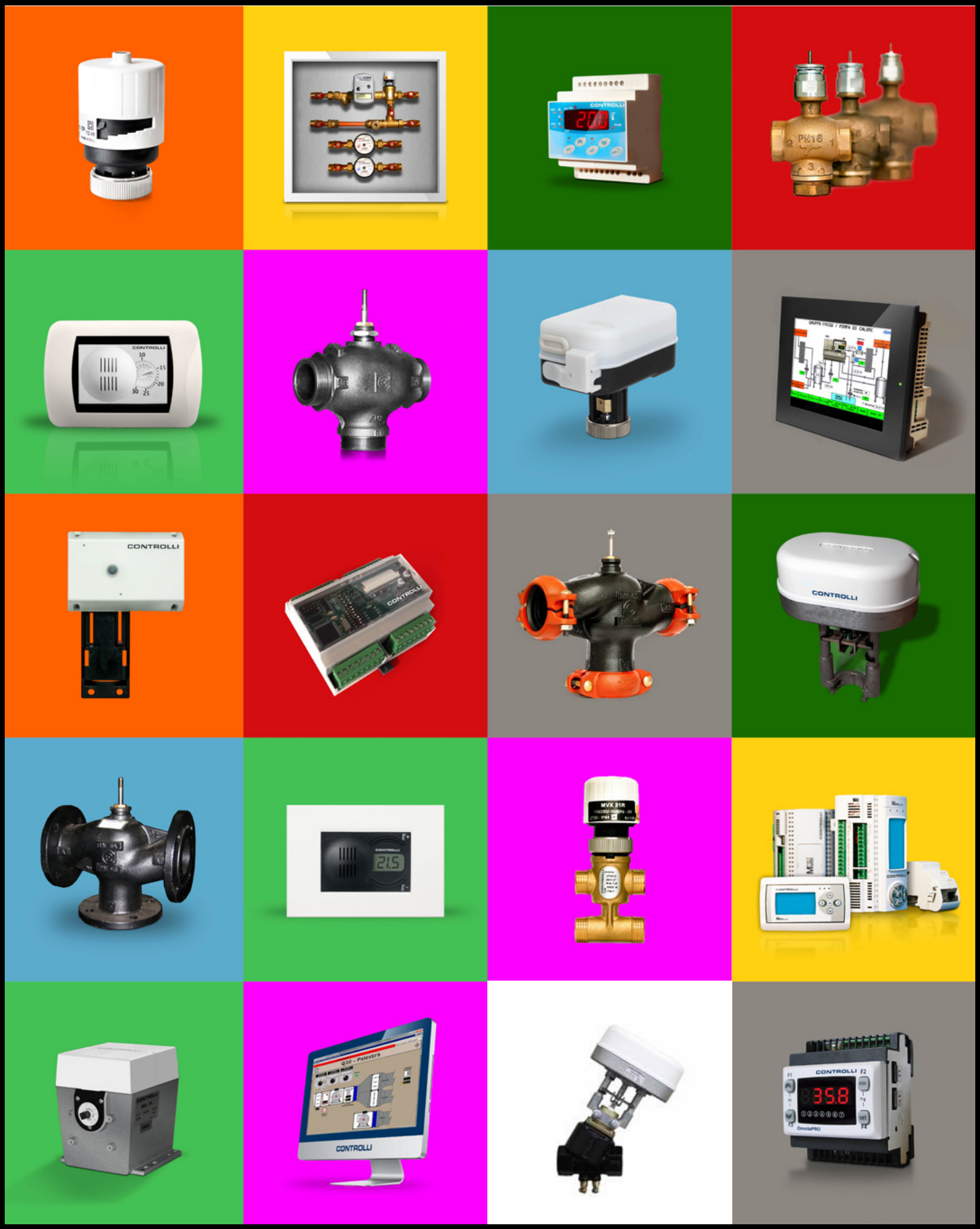

FOR CONTROL EQUIPMENTS PLEASE REFER TO OUR CATALOGUE #2 "SENSORS & CONTROLLERS" THAT YOU MAY DOWNLOAD FROM OUR WEBSITE: www.controlli.eu

VALVES & ACTUATORS

We are proud to offer one of the largest range of valves and actuators in the HVAC market. Valves range from 15mm to 200mm for fluids with temperature from -30°C to +350°C, max. pressure 12bar (steam) or 30bar (water). Linear actuators start at 90N and go up to 3000N. Rotary actuators for butterfly valves and shoes valves and for direct mounting on air dampers up to 2sqm.

CONTROLLERS

To start with, we will mention our thermostats for heating and cooling, our fan-coil units controllers, room controllers, ddc controllers with parameter-setting as well as programmable controllers. Not to forget our KX climatic controllers with outside temperature compensation. Controllers are offered either as stand-alone or with ModBus connectivity. Our range includes sensors, transmitters and switches for temperature, humidity, pressure, differential pressure, air quality, etc.

SUPERVISORY SYSTEMS

To make matters easy, we propose pre-programmed GT (graphic terminals) touch-screens, with web Server capabilities for remote monitoring through Internet Explorer. GT touch-screens are supplied ready for most of our controllers (W500, OmniaPro, Liberty). One GT is suitable to approx. 40 controllers at one time.

HEAT METERING & MORE

Last but not least, we are continuously improving our range for heat metering systems, variable speed drives, Dynamic Pressure Independent Control Valves, solutions for underfloor systems and more.

MICRA® MOTORIZED VALVES FOR FAN-COIL UNITS

Brass valves for FCUs 2way, 3way, 3way + bypass, Kvs 0,25 to 6, with On-Off / Modulating thermic actuators (90N & 140N force) and 3 pos. / Modulating electric actuators (200N force).

GLOBE VALVES WITH THREADED CONNECTIONS

Cast iron or bronze PN16 valve bodies with threaded connections ½" up to 2" for fluids from -10°C to +150°C.

GLOBE VALVES WITH FLANGED CONNECTIONS

PN16, PN15, PN40 globe valves with flanged connections DN-15mm to DN200mm, suitable to fluids (water, glycol, steam, thermal oil) from -30°C to +350°C.

GLOBE VALVE ACTUATORS

Linear actuators from 450N to 3000N, with or without spring return. Includes MVE range of new generation actuators 600N, 1000N & 1500N force with self adjusting and auto dignostic capabilities.

BUTTERFLY VALVES

PN16 butterfly valves, 100% tight close-off, DN25mm to DN200mm to be motorized by MDL or MDA actuators (up to 30Nm).

PICVs

PN25 dynamic pressure independent control valves 1/2" to 2" and DN50 to DN150 with On/Off or proportional actuators suitable to fluids up to 120°C

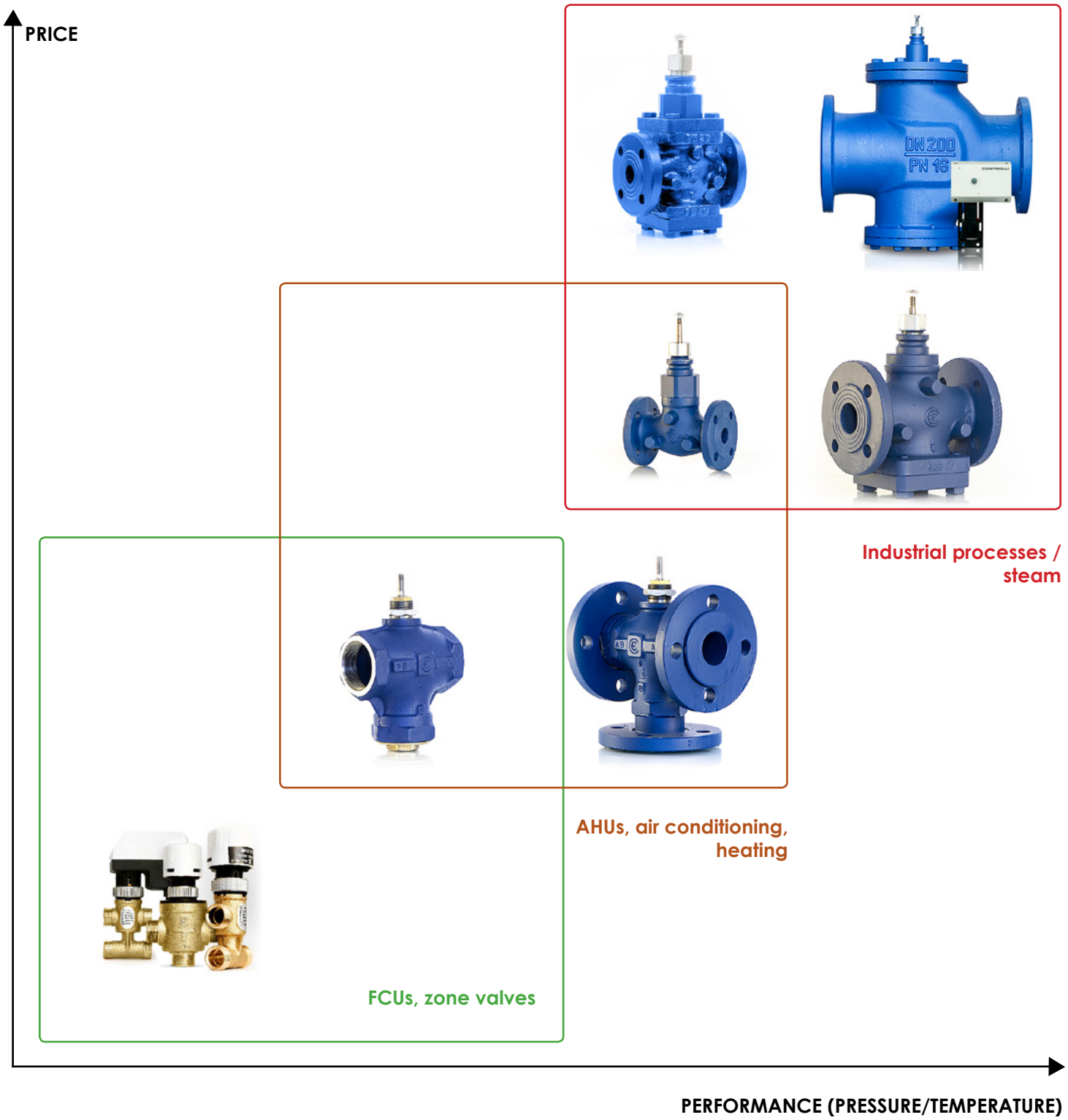
PRICE
DN 200
PN 16
Industrial processes / steam
AHUs, air conditioning, heating
FCUs, zone valves
PERFORMANCE (PRESSURE/TEMPERATURE)

MICRA

Motorized valves with compact dimensions for FCUs

MICRA is our successful range of motorized valves for fan-coil units.
Range consists of PN16 brass (CW617N) valve bodies with compact dimensions: 2way, 3way, 3way-4ports
With sizes 1/2" and 3/4" and Kvs from 0,25 to 6.
Valves are 100% tight close-off.

All valve bodies are available with either flat end threaded connections or conic (Conex).
4-ports versions (3way with bypass) are available with different port-to-port distances (C)

½" models with Kvs up to 1.6:	35mm or 40mm distance
¾" models with Kvs up to 2.5:	40mm or 50mm distance
¾" models with Kvs up to 6:	44mm distance

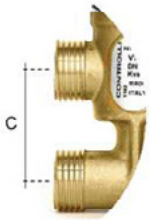

VSX (2-way), VMX (3-way), VTX (3-way 4-ports)

- valves with 2,5mm stroke
- for electro-thermal actuators (On/Off or modulating)
- totally silent
- spring return (Normally Open & Normally Closed depending on actuator models)
- no friction, no wear
- price competitive solution

VSXT (2-way), VMXT (3-way), VTXT (3-way 4-ports)

- valves with 5,5mm stroke
- for electro-mechanical actuators
- faster opening / closing times
- higher close-off
- better modulating control
- 3 pos. control also available

Micra - Fan Coil Motorised Valves 90 N

Actuators series MVX - Electrothermal actuator for normally closed V.X valves - Stroke end indicator - 2 m bipolar/tripolar cable - Protection IP44.

MODEL	STARTING TIME s.	SUPPLY Vac	FORCE N	ACTION
MVX21R	60	110-230	90	on-off
MVX41R	60	24	90	on-off, PWM
MVX57	60	24	90	proportional 0-10 Vdc

MVR series 90 N Electrothermal actuator for V.X valves with reverse action - 0.65 m cable - IP44 protection.

MODEL	STARTING TIME s.	SUPPLY Vac	FORCE N	ACTION
MVR230V[1)]	60	110-230	90	on-off - normally open for Micra valve
MVR24V[1)]	60	24	90	on-off - normally open for Micra valve

1. These models are also available with auxiliary microswitch. When ordering this version, add the letter "M" at the end of the model code, e.g. MVR230M.

Series V.X. - **PN16** brass valve bodies - Tight close-off both on direct and angle way - PPS plug with double EPDM o-ring - Fluid: water and water+glycol 30% max. - Temperature 5 to 95 °C - **Stroke 2.5 mm** - Threaded connections for conic and flat tight - Motorised by MVX-MVR.

MODEL	Kvs		CLOSE-OFF bar	ACTION TYPE ON DIRECT WAY	THREADED CONNECTIONS	TIGHT
	DIRECT WAY	ANGLE WAY				
VSX09P	0.25	-	2.5	2-way n.c.	G 1/2" M	flat
VSX10P	0.4	-	2.5		G 1/2" M	flat
VSX11P	0.6	-	2.5		G 1/2" M	flat
VSX12P	1	-	2.5		G 1/2" M	flat
VSX13	1.6	-	2.5		G 1/2" M	conic
VSX13P	1.6	-	2.5		G 1/2" M	flat
VSX21	2.5	-	1.5		G 3/4" M	conic
VSX21P	2.5	-	1.5		G 3/4" M	flat
VMX09P	0.5	0.25	2.5	3-way	G 1/2" M	flat
VMX10P	0.4	0.4	2.5		G 1/2" M	flat
VMX11P	0.6	0.6	2.5		G 1/2" M	flat
VMX12P	1	0.6	2.5		G 1/2" M	flat
VMX13	1.6	1	2.5		G 1/2" M	conic
VMX13P	1.6	1	2.5		G 1/2" M	flat
VMX21	2.5	1.6	1.5		G 3/4" M	conic
VMX21P	2.5	1.6	1.5		G 3/4" M	flat
VTX09P[1)]	0.25	0.25	2.5	3-way 4-port	G 1/2" M	flat
VTX10P[1)]	0.4	0.4	2.5		G 1/2" M	flat
VTX11P[1)]	0.6	0.6	2.5		G 1/2" M	flat
VTX12P[1)]	1	0.6	2.5		G 1/2" M	flat
VTX13	1.6	1	2.5		G 1/2" M	conic
VTX13P[1)]	1.6	1	2.5		G 1/2" M	flat
VTX21	2.5	1.6	1.5		G 3/4" M	conic
VTX21P[1)]	2.5	1.6	1.5		G 3/4" M	flat

1. These models are also available with 40mm port-to-port distance (C) . When ordering 40mm distance version, add "4" at the end of the model code e.g. VTX21P4. See also picture on pag12

Fan Coil Motorised Valves with high Kvs 140 N

Actuators series MVX - Electrothermal actuator for V.X valves with Kvs 4 and 6 - Stroke end indicator - 2 m. bipolar/tripolar cable - Protection IP44.

MODEL	STARTING TIME s.	SUPPLY Vac	FORCE N	ACTION
MVX22R	90	110-230	140	on-off
MVX42R	90	24	140	on-off, PWM
MVX52	90	24	140	proportional 0-10 Vdc

Series V.X. - **PN16** brass valve bodies - Tight close-off both on direct and angle way - Brass plug with double EPDM o-ring Fluid: water and water + glycol 30% max. - Temperature 5 to 95°C - **Stroke 2.5 mm** - Threaded connection for conic and flat tight. Motorised by MVX actuators.

MODEL	Kvs		CLOSE-OFF bar	ACTION TYPE ON DIRECT WAY	THREADED CONNEC-TIONS	TIGHT
	DIRECT WAY	ANGLE WAY				
VSX24P	4	-	1.5	2-way n.c	G 3/4" M	flat
VSX26P	6	-	1.5		G 3/4" M	flat
VMX24P	4	2.5	1 (0.4)[1]	3-way	G 3/4" M	flat
VMX26P	6	4	1 (0.4)[1]		G 3/4" M	flat
VTX24P	4	2.5	1 (0.4)[1]	3-way 4-port	G 3/4" M	flat
VTX26P	6	4	1 (0.4)[1]		G 3/4" M	flat

1. The values in brackets refer to the angle way.

Accessories

DESCRIPTION
VXC - Manual control for V.X and V.XT series valves

Thermal insulation, see page 40.

Valve Bodies with 5.5mm stroke for fan coil units

For all MVT actuators (pages 34-35)

Series V.XT - **PN16** forged brass valve body - Tight close-off both on direct and angle way - Plug with double EPDM OR - Fluid: water and water+glycol 30% max., temperature 2 to 95°C - **Stroke 5.5 mm** - Flow characteristic: equal-percentage direct way, linear angle way. To be motorised with MVT actuator.

MODEL[1]	Kvs		CLOSE-OFF bar	ACTION TYPE DIRECT WAY	THREADED CONNEC-TIONS	TIGHT
	DIRECT WAY	ANGLE WAY				
VSXT09P	0.25	-	3.5	2-way n.c	G 1/2" M	flat
VSXT10P	0.4	-	3.5		G 1/2" M	flat
VSXT11P	0.6	-	3.5		G 1/2" M	flat
VSXT12P	1	-	3.5		G 1/2" M	flat
VSXT13P	1.6	-	3.5		G 1/2" M	flat
VSXT1P	2	-	2.5		G 1/2" M	flat
VSXT21P	2.5	-	2.5		G 3/4" M	flat
VSXT24P	4	-	1.5		G 3/4" M	flat
VSXT26P	6	-	1.5		G 3/4" M	flat
VMXT09P	0.25	0.25	3.5	3-way	G 1/2" M	flat
VMXT10P	0.4	0.25	3.5		G 1/2" M	flat
VMXT11P	0.6	0.4	3.5		G 1/2" M	flat
VMXT12P	1	0.6	3.5		G 1/2" M	flat
VMXT13P	1.6	1	3.5		G 1/2" M	flat
VMXT1P	2	1.6	2.5		G 1/2" M	flat
VMXT21P	2.5	1.6	2.5		G 3/4" M	flat
VMXT24P	4	2.5	1 (0.4)[1]		G 3/4" M	flat
VMXT26P	6	4	1 (0.4)[1]		G 3/4" M	flat
VTXT09P[2]	0.25	0.25	3.5	3-way 4-port	G 1/2" M	flat
VTXT10P[2]	0.4	0.25	3.5		G 1/2" M	flat
VTXT11P[2]	0.6	0.4	3.5		G 1/2" M	flat
VTXT12P[2]	1	0.6	3.5		G 1/2" M	flat
VTXT13P[2]	1.6	1	3.5		G 1/2" M	flat
VTXT1P[2]	2	1.6	2.5		G 1/2" M	flat
VTXT21P[2]	2.5	1.6	2.5		G 3/4" M	flat
VTXT24P	4	2.5	1 (0.4)[1]		G 3/4" M	flat
VTXT26P	6	4	1 (0.4)[1]		G 3/4" M	flat

- *All V.XT valves are available with conic connection. When ordering this version, ignore the letter "P" at the end of the model code; e.g. VSXT21.*

1. *The values in brackets refer to the angle way.*
2. *These models are also available with 40mm port-to-port distance (C). When ordering 40mm distance version, add "4" at the end of the model code e.g. VTXT21P4. See also picture on pag12*

Zone Valves

Series VS/VD - On/off actuator with aluminium case - Power supply 230 Vac and 24 Vac -Spring return - Stroke end microswitch.
Brass valve body - Temperature range 0 to 93 °C - Mixing and diverting.

MOD.	DESCRIPTION	POWER SUPPLY	Kvs
	2 way		
VS21	on\off - ½"	230V - 50/60HZ	2,2
VS22	on\off - ¾"	230V - 50/60HZ	3,0
VS23	on\off - 1"	230V - 50/60HZ	6,9
VS41	on\off - ½"	24V - 50/60HZ	2,2
VS42	on\off - ¾"	24V - 50/60HZ	3,0
VS43	on\off - 1"	24V - 50/60HZ	6,9

MOD.	DESCRIPTION	POWER SUPPLY	Kvs
	3 way		
VD21	on\off - ½"	230V - 50/60HZ	2,6
VD22	on\off - ¾"	230V - 50/60HZ	3,4
VD23	on\off - 1"	230V - 50/60HZ	6,5
VD41	on\off - ½"	24V - 50/60HZ	2,6
VD42	on\off - ¾"	24V - 50/60HZ	3,4
VD43	on\off - 1"	24V - 50/60HZ	6,5

By a simple rotation of the actuator cover the installer can adjust it to manifolds or valves without the need of adapters (that are usually and easily lost).

MCA

Valve Adaptive concept without adapters

Protection from condensation and from leaking regardless of the valve position (throughout 360°)
Function Indicator Pin visible from any direction.
Fast installation thanks to our Manual Override Position.
MCA has not only a protection from condensation and from water leak whichever is the mounting position (IP54 also up side down), but it is designed to be adapted to the majority of underfloor heating manifolds and zone valves up to 4 mm stroke available on the market without the need of any adapters. Another peculiarity of MCA is the Manual Override position, which allows opening and closing the valve/manifold through an easy operation and without powering the actuator.

Last but not least, the MCA is equipped with an ON/OFF Position Indicator, visible from any directions, which allows an easy and fast installation.
As for any other Controlli product, the reliability and quality are key requirements, that's why our products continuously undergo life tests and each MCA is tested before being shipped to the customer.
MCA is available with or without a end-stroke switch contact and with the possibility to be powered with 110/220Vac or 24Vac/dc.

MCA is then the ideal product for installers and distributors who can use it on any manifolds/valves but also for OEMs thanks to its high performances, its installation quickness as well as the possibility to be customized for example with the customer's logo.

MODEL	CONTROL SIGNAL [Vac]	AUXILIARY MICROSWITCH	POWER [N]	STROKE [mm]	PROTECTION
MCA230	110÷230	--	90N	3	IP54
MCA230M		•			
MCA24	24	--			
MCA24M		•			
MCA230L	110÷230	--	140N	4	
MCA230LM		•			
MCA24L	24	--			
MCA24LM		•			

Electrothermal actuator for manifolds and radiant panels: 90 N

On/off and PWM control - Fast opening/closing times - 24 Vac, 110-230Vac, 50-60 Hz IP44 - 4.0 mm stroke - M30x1.5 connection on valves/manifolds - 90N force - Starting time 60 sec. Auxiliary microswitch. Operation: without power supply MVR spindle is in "outside" position; when powered MVR pulls the spindle "inside".
All models are also available with auxiliary microswitch. When ordering this version, add the letter "M" to the model code, e.g. MVR230MC2.

MODEL	STEM OUTPUT	SUPPLY Vac	FORCE N	ACTION
MVR230	10,7÷11,8	110-230	90	on-off
MVR24	10,7÷11,8	24	90	on-off, PWM
MVR230C1 1)	12,3÷13,4	110-230	90	on-off
MVR24C1 1)	12,3÷13,4	24	90	on-off, PWM
MVR230C2 1)	11,3÷12,4	110-230	90	on-off
MVR24C2 1)	11,3÷12,4	24	90	on-off, PWM
MVR230C3 1)	10,3÷11,4	110-230	90	on-off
MVR24C3 1)	10,3÷11,4	24	90	on-off, PWM

1) Models suitable to manifolds or valves of many different brands. Please check Controlli "MVR_DBL310E" data sheet for details.

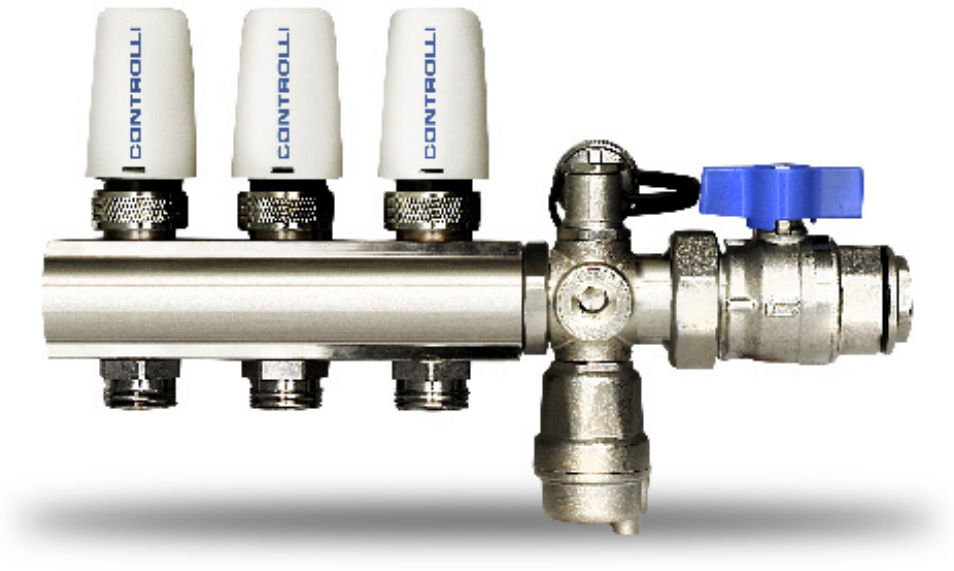

Customizable

Thanks to a little plastic stem adapter, our MVR thermal actuators are suitable to a number of different valves or manifolds.
Connection is M30x1.5. All materials are self-extinguishing rated V0. An indicator shows the open/closed position of the actuator.
MVR actuators can easily be customized with your company logo.

MVX52B

Electro-thermal actuator for valves including PICVs (pressure independent control valves)

MVX52B is a proportional 0..10Vdc actuator suitable to a variety of applications:

- normally closed on pressure independent control valves;
- normally open on Controlli Micra valves (VSX, VMX, VTX)
- normally closed on manifolds.

The actuator-valve assembly is easily achieved thanks to the M30x1.5 threaded ring nut.
Actuator has a 4mm fixed stroke and provides a proportional reverse action with 0-10Vdc control signal.

The actuator is equipped with a potentiometer which allows to limit the valve maximum opening stroke (selectable from 20% to 100%).
When control signal is 0Vdc: actuator spindle is completely out (bottom position if mounting is vertical).
When control signal is 10Vdc: actuator spindle is completely inside (top position if mounting is vertical).

For example, if the potentiometer is set to 6 (60%):

- maximum stroke becomes 2.4 mm
- with 0Vdc signal actuator spindle is in the bottom position and with 10Vdc signal actuator reaches 60% of the whole stroke (2.4mm).

Micra valves closure is guaranteed only by selecting 100%
More features: 24Vac power supply at 50/60Hz; 2m cable triple-pole (0,35mm2); IP44 protection; 140N force; 4mm stroke.

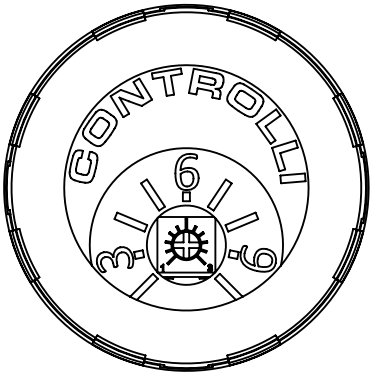

MORE OPTIONS

For all our electro-thermal actuators MVX.., MCA.. and MVR..
and for all our electro-mechanical actuators MVT..
standard ring nut (for assembling the actuator onto the valves) is M30x1.5 but M28x1.5 is available as a variant by adding PS107 at the end of the actuator part-number.

For example:

MCA230L	standard version with M30x1.5 ring nut
MCA230LPS107	special version with M28x1.5 ring nut
MVT28	standard version with M30x1.5 ring nut
MVT28PS107	special version with M28x1.5 ring nut

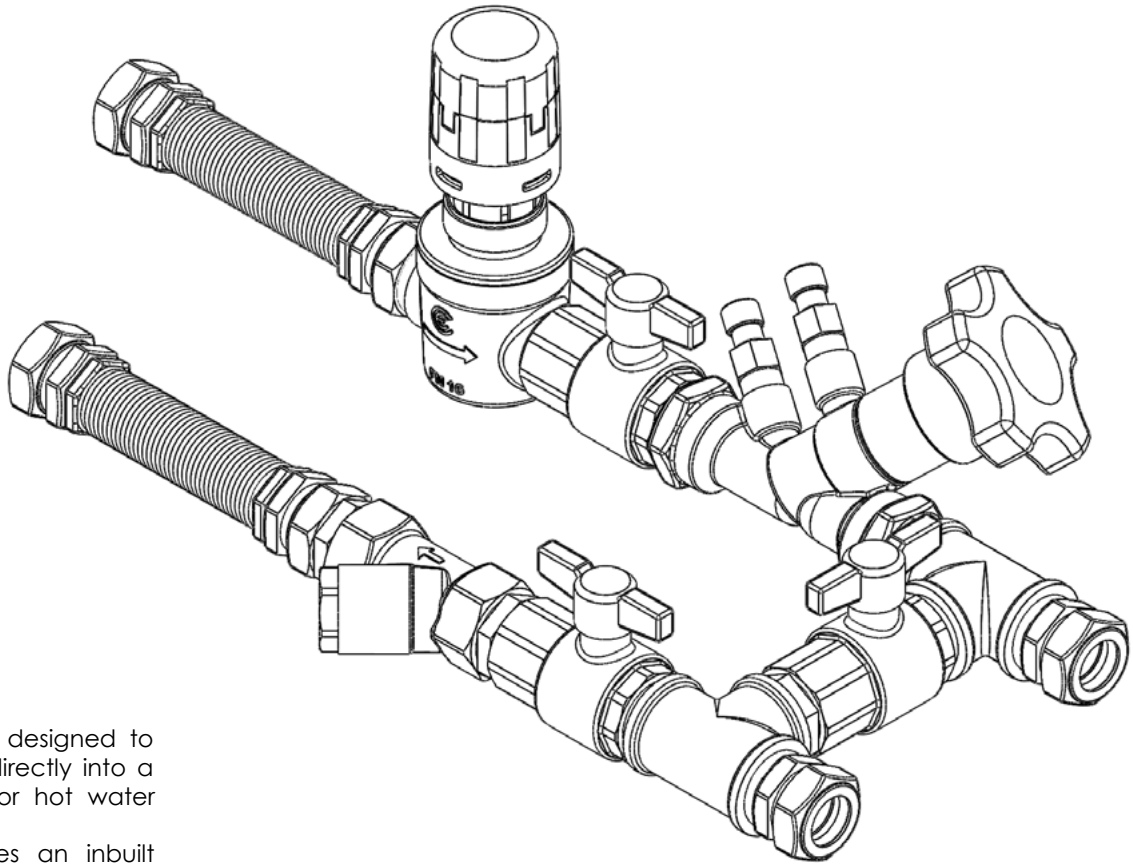

HVFC22

Fan Coil Linking Kit

Controlli HVFC… kits are designed to connect a fan-coil unit directly into a building's chilled water or hot water network.
Each HVFC… kit includes an inbuilt factory-assembled set of valves and accessories in order to reduce on site installation and commissioning times and to prevent potential future system leakage from fan coil unit systems. It may also include a balancing valve with pressure tests points, installed on the return line.
All necessary components are installed as a single item which is then 100% pressure-tested in the factory prior to delivery to site.
No specific tools are needed for installation. A built-in bypass section includes a full port isolating valve to enable coil and circuit flushing and cleaning to be carried out without the need to switch off the attached fan coil unit.
All products are manufactured, assembled and tested in Italy.

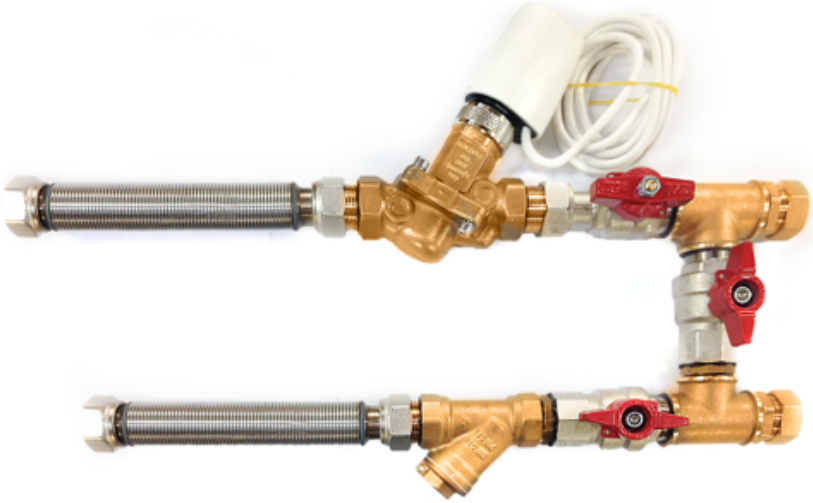

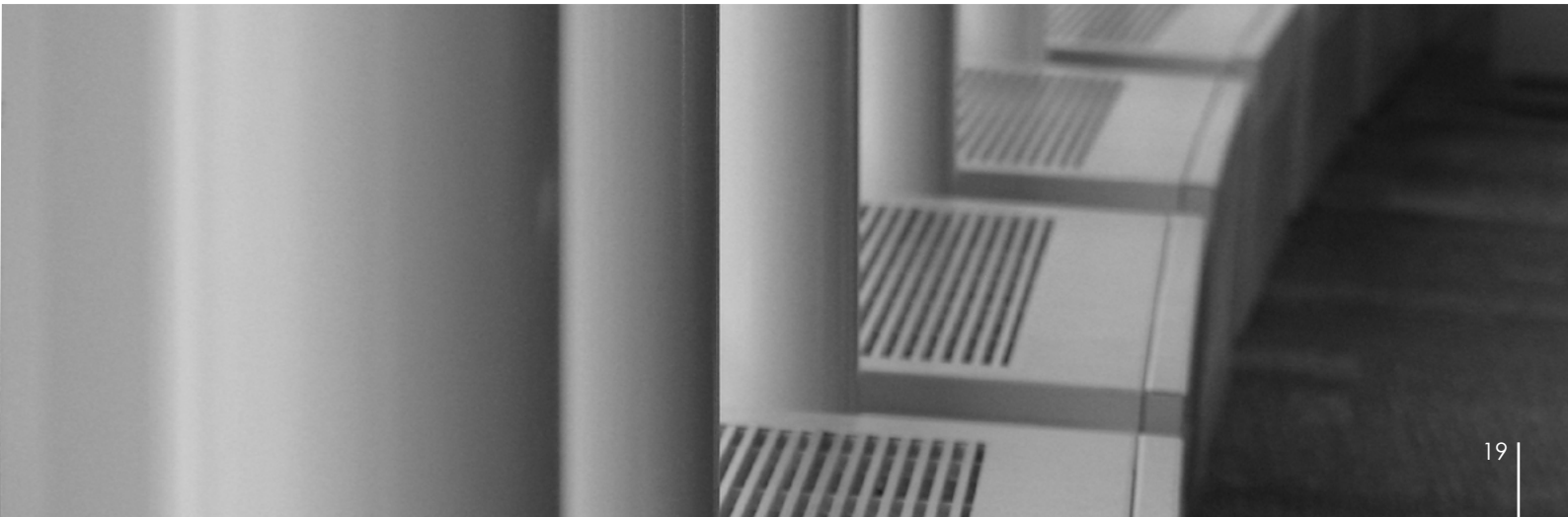

Series 2T (threaded) - **PN16** - Stroke 11.5 mm. To be motorised by MVB (2TGB.B) or MVE.S (2TGB.F) actuators.

MODEL	DN	Kvs	MAX DIFFERENTIAL PRESSURE bar	OTHER FEATURES
2TGB15BR00	1/2"	0.4	16	- GJL-250 cast-iron body - Brass internal parts - Equal-percentage control flow characteristic - Leakage 0 to 0.001% Kvs - Female threaded connections: fluid temperature -5[2] to 140 °C, with MVB max 120°C (140 °C with MVB+MVBHT) - **For MVB actuator** - **For MVT203,403,503 actuators using AG74-03 adapter**
2TGB15BR0	1/2"	0.63		
2TGB15BR1	1/2"	1		
2TGB15BR2	1/2"	1.6		
2TGB15BR3	1/2"	2.5		
2TGB15B	1/2"	4		
2TGB15FR00	1/2"	0.4	16	- GJL-250 cast-iron body - Brass internal parts - Equal-percentage control flow characteristic - Leakage 0 to 0.001% Kvs - Female threaded connections: fluid temperature -5[1] to 140 °C - **For MVE.S actuator**
2TGB15FR0	1/2"	0.63		
2TGB15FR1	1/2"	1		
2TGB15FR2	1/2"	1.6		
2TGB15FR3	1/2"	2.5		
2TGB15F	1/2"	4		

- *In order to avoid seat & plug wearing issues we recommend not to exceed 4 bar differential pressure.*

1. *For applications with ice formation on stem and packing, use the stem heater.*

Series VSB (threaded) - VSB.F (flanged) - **PN16** - Stroke 16.5 mm. To be motorised by MVB - MVE - MVH actuators - Thermal insulation available.

MOD	DN	Kvs	MAX DIFFERENTIAL PRESSURE bar						OTHER FEATURES
			MVB	MVE506	MVE510	MVE515	MVH	MVH56FA MVH56FC	
VSB3	3/4"	6.3	10,8	16	16	16	16	16	- G 25 cast-iron body - Brass internal parts - Female threaded connections: fluid temperature -10[1] to 150 °C, with MVB max 120°C (140°C with MVB+MVBHT) - Equal-percentage control flow characteristic - Leakage 0.03% Kvs - For MVE actuator, add AG52 linkage - For MVH actuator, add AG62 linkage
VSB4	1"	10	6,8	11,9	16	16	16	13,8	
VSB5	1 ¼"	16	4,1	7,2	12,1	16	16	8,4	
VSB6	1 ½"	22	2,9	5	8,6	13	11,7	5,9	
VSB8	2"	30	2,1	3,7	6,4	9,6	8,7	4,4	
VSB8A	2"	40	2,1	3,7	6,4	9,6	8,7	4,4	
VSB3F	20	6.3	10,8	16	16	16	16	16	As above but with slip-on flanges
VSB4F	25	10	6,8	11,9	16	16	16	13,8	
VSB5F	32	16	4,1	7,2	12,1	16	16	8,4	
VSB6F	40	22	2,9	5	8,6	13	11,7	5,9	
VSB8F	50	30	2,1	3,7	6,4	9,6	8,7	4,4	
VSB8AF	50	40	2,1	3,7	6,4	9,6	8,7	4,4	

- *By spring return MVHFA closed, MVHFC open.*
- *In order to avoid seat & plug wearing issues we recommend not to exceed 2 bar differential pressure.*

1. *For applications with ice formation on stem and packing, use the stem heater.*

Tight Close-off

Series VSBPM threaded valves - Modulating tight close-off valves **PN16** - Thermal insulation available - To be motorised by MVB actuators.

MODEL	DN	Kvs	STROKE mm	MAX DIFFERENTIAL PRESSURE bar	OTHER FEATURES
VSBP3M	3/4"	6.3	16.5	2 (8.8)	- G 25 cast-iron body - Fluid temperature -5 to 95°C - Leakage 0% Kvs
VSBP4M	1"	10	16.5	2 (5.5)	
VSBP5M	1 ¼"	16	16.5	2 (5.5)	
VSBP6M	1 ½"	25	16.5	2 (2.5)	
VSBP8M	2"	40	16.5	1.8	

- *Values in brackets are max close-off differential pressure. In applications with steam, the value in brackets is not applicable.*
- *In order to avoid seat & plug wearing issues we recommend not to exceed 2 bar differential pressure.*

Series VSB.T in G25 cast-iron **PN16** - Stroke 5,5mm - To be motorised by MVT203,403,503 actuators.

MODELS	DN	Kvs	MAX DIFF PRESSURE [bar]	OTHER FEATURES
		A-AB	A-AB	
VSB3T	3/4"	6,3	9	- G25 cast iron body - Fluid temperature 5 to 95 °C - Linear control characteristic - Leakage: direct way <0.03% Kvs angle way < 2% Kvs
VSB4T	1"	10	5,5	
VSB5T	1-¼"	14	3,5	
VSB6T	1 ½"	18	2,5	
VSB8T	2"	25	1,9	

- *OLD VSBT3, VSBT4, VSBT5, VSBT6 (MOTORIZED BY MVT44,28,56,57 ACTUATORS) STILL AVAILABLE AS SPARE PARTS*

2-way Globe Valves with high performances

2TGA.B Series 2-way valves **PN16** with pressure balanced plug, compact dimensions, threaded connections up to 2", maximum temperature 130°C, suitable to applications with high close-off pressure: up to 10 bar close-off.
8,5mm stroke for MVT28, MVT44, MVT203S, MVT403S, (3 pos.) and MVT56L, MVT503S (proportional) actuators.

MODEL	DN	KVS	MAX. DIFFERENTIAL PRESSURE WITH MVT ACTUATORS	OTHER FEATURES
2TGA20B	3/4"	5	10 bar	Stainless steel internal parts (seat, plug, stem)
2TGA25B	1"	10		
2TGA32B	1 ¼"	13		
2TGA40B	1 ½"	18		
2TGA50B	2"	30		

2TBB Series = 2-way valves, bronze body, with threaded connections up to 2", brass plug, stainless steel stem. Temperature applications -10°C to 130°C. Rangeability 50:1.
To be motorised by MVE and MVH actuators (no adapter needed).
1/2" and 3/4" models are tight close-off. Maximum leakage on 1" to 2" models is 0.1% of Kvs.
Stroke on 1/2" and 3/4" models is 9.5mm. Stroke on 1" to 2" models is 16mm.

Model	DN	Kvs	MAX DIFFERENTIAL PRESSURE (bar)			
			MVE506	MVE510	MVE515	MVH56FA MVH56FC
2TBB15R1	1/2"	0,2	16	16	16	16
2TBB15R2	1/2"	0,5	16	16	16	16
2TBB15R3	1/2"	1	16	16	16	16
2TBB15	1/2"	2,5	16	16	16	16
2TBB20	3/4"	5	16	16	16	16
2TBB25	1"	10	11,3	16	16	13,2
2TBB32	1 ¼"	16	7,1	12,2	16	8,4
2TBB40	1 ½"	25	4,9	8,4	12,8	5,7
2TBB50	2"	38	2,7	4,6	7,1	3,2

MVGS2

2-way control valve for applications with gas or liquid hydrocarbons

MVGS2 is a motorized valve designed to modulate fuel gas supply in industrial burners / ovens.
It is possible to calibrate the minimum fluid (gas or liquid) flow rate through a pin on the valve body.
The minimum calibration allows bypass control until complete close-off.
Valve is motorized by MVB46P actuator with 3-point control, 24Vac power supply and 1kΩ feedback signal.
On request, it is possible to motorize this valve with any other MVB actuator model.

See page 34 for more information about MVB actuators.

PN:	10bar (1000kPa)
Connections:	G1"F
Kvs:	10 (m3/h)
Stroke:	20mm
Plug:	NBR suitable to hydrocarbons, metane, propane, butane, etc.
Control characteristics:	(Kvs/Kvm) >50
Leakage:	0% (tight close-off, if bypass is closed)
Fluid temperature:	-10° / +90°C according to the type of fluid

Flanged Globe Valves Selection Chart

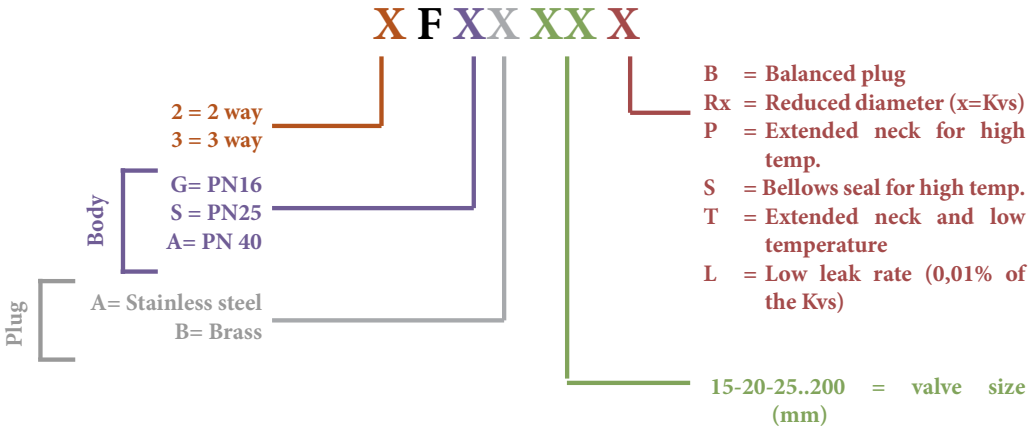

2-way flanged Valves

Series 2F - **PN16** - Stroke 16.5 mm (DN25), 25 mm (DN40 to 65) 45 mm (DN80 to 150) - To be motorised by MVH - MVE actuators.

MODEL	DN	Kvs	MAX DIFFERENTIAL PRESSURE bar						OTHER CHARACTE-RISTICS
			MVE506	MVE510	MVE515	MVH	MVH3K	MVH56FA MVH56FC	
2FGB25R4	25 R	4	9,4	15,9	16	16	16	11	- G 25 cast-iron body internal parts in bronze - PN16 flanged connections - Fluid temperature: - 10[1] to 150 °C - Control flow characteristics equal-percentage - Leakage 0.03% Kvs - **Leakage 0.01% Kvs (codes with "L" see example below)*.**
2FGB25R7	25 I	6.3	9,4	15,9	16	16	16	11	
2FGB25	25	10	9,4	15,9	16	16	16	11	
2FGB40	40	25	5	8,6	13	11,7	16	5,9	
2FGB40R	40	19	5	8,6	13	11,7	16	5,9	
2FGB50	50	40	3,1	5,3	8,1	7,3	16	3,6	
2FGB65(L)	65	63	1,8	3,1	4,8	4,3	9,6	2,1	
2FGB80(L)	80	100	1,1	2	3,1	2,8	6,2	1,3	
2FGB100(L)	100	130	0,7	1,2	1,9	1,7	3,9	0,8	
2FGB125(L)	125	200	0,4	0,7	1,2	1	2,4	0,5	
2FGB150(L)	150	300	0,3	0,5	0,8	0,7	1,6	0,3	
2FGA15R0	15R	0.6	16	16	16	16	16	16	- G 25 cast-iron body internal parts in stainless steel - PN16 flanged connections - Fluid temperatu-re: - 10[1] to 200 °C - Equal-percenta-ge control flow characteristic - Leakage 0.02% Kvs
2FGA15R1	15R	1	16	16	16	16	16	16	
2FGA15R2	15R	1.6	16	16	16	16	16	16	
2FGA15R3	15R	2.5	16	16	16	16	16	16	
2FGA15	15	4	16	16	16	16	16	16	
2FGA20	20	6.3	12,5	16	16	16	16	15,1	
2FGA25	25	10	7,6	14,1	16	16	16	9,2	
2FGA32	32	16	7,6	14,1	16	16	16	9,2	
2FGA40	40	24	5,1	9,5	15	13,4	16	6,2	
2FGA50	50	40	3,3	6,2	9,8	8,7	16	4	
2FGA65	65	63	1,3	2,5	4	3,5	8,3	1,6	
2FGA80	80	110	0,8	1,6	2,6	2,3	5,5	1	
2FGA100	100	140	0,5	1	1,6	1,4	3,5	0,6	

- *In order to avoid seat & plug wearing issues we raccomend not to exceed 2 bar (2FGB) & 6 bar (2FGA) differential pressure.*

1. *For applications with possible ice formation on stem and packing, use the stem heater.*

***Example: 2FGB65** *valve with leakage 0,03% of the Kvs*
2FGB65L *valve with leakage 0,01% of the Kvs*

Series 2F - **PN25-40** - Stroke 16.5 mm (DN25), 25 mm (DN32 to 65) 45 mm (DN80 to 150) - To be motorised by MVE and MVH actuators.

MODEL	DN	Kvs	MAX DIFFERENTIAL PRESSURE bar						OTHER FEATURES
			MVE506	MVE510	MVE515	MVH	MVH3K	MVH56FA MVH56FC	
2FSA25R4	25 R	4	18,5	25	25	25	25	21,5	- Spheroidal cast-iron body internal parts in stainless steel - PN25 flanged connections - Fluid temperature: -10[1] to 230°C - Equal-percentage control flow characteristic - Leakage 0.02% Kvs
2FSA25R7	25I	6.3	9,3	15,8	23,9	21,5	25	10,8	
2FSA25	25	10	9,3	15,8	23,9	21,5	25	10,8	
2FSA32	32	16	6,2	10,6	16,1	14,5	25	7,3	
2FSA40	40	25	4,4	7,6	11,6	10,4	23,1	5,2	
2FSA50	50	40	2,8	4,8	7,4	6,6	14,7	3,3	
2FSA65	65	63	1,6	2,8	4,3	3,9	8,6	1,9	
2FAA15R2	15 R	1.6	30	30	30	30	30	30	- Fe 52 steel body internal parts in stainless steel - PN40 flanged connections - Fluid temperature: -10[1] to 230 °C - Equal-percentage control flow characteristic - Leakage 0.02% Kvs
2FAA15	15	4	14,5	32,1	40	30	30	18,7	
2FAA20	20	6.3	8,5	19	32,2	28,4	30	11,1	
2FAA25	25	10	5,1	11,6	19,8	17,4	30	6,7	
2FAA32	32	16	5,1	11,6	19,8	17,4	30	6,7	
2FAA40	40	24	3,4	7,8	13,3	11,7	29,2	4,5	
2FAA50	50	32	2,2	5,1	8,7	7,6	19,1	2,9	
2FAA65	65	63	0,8	2	3,5	3,1	7,9	1,1	
2FAA80	80	110	0,5	1,3	2,3	2	5,2	0,7	
2FAA15PR2	15 R	1.6	30	30	40	30	30	30	- Fe 52-steel body with extended neck internal parts in stainless steel with greaser and special gaskets for high temperatures - PN40 flanged connections - Fluid temperature: -20[1] to 350°C - Equal-percentage control flow characteristic - Leakage 0.02% Kvs
2FAA15P	15	4	14,5	32,1	40	30	30	18,7	
2FAA20P	20	6.3	8,5	19	32,2	28,4	30	11,1	
2FAA25P	25	10	5,1	11,6	19,8	17,4	30	6,7	
2FAA32P	32	16	5,1	11,6	19,8	17,4	30	6,7	
2FAA40P	40	24	3,4	7,8	13,3	11,7	29,2	4,5	
2FAA50P	50	32	2,2	5,1	8,7	7,6	19,1	2,9	
2FAA65P	65	63	0,8	2	3,5	3,1	7,9	1,1	
2FAA80P	80	110	0,5	1,3	2,3	2	5,2	0,7	

- *In order to avoid seat & plug wearing issues we recommend not to exceed 8 bar (2FSA & 2FAA) & 12 bar (2FAAP) differentia- pressure.*
- *For applications with possible ice formation on stem and packing, use the stem heater.*

1. *For fluid applications with temperature below -10 °C, when ordering, add "T" instead of "P" to model, e.g. 2FAA40T.*

2-way Balanced Plug Valves

Series 2F.B **PN16-25-40** Stroke 16.5 mm (DN25), 25 mm (DN40 to 65) 45 mm (DN80 to 150).
To be motorised by MVH-MVE actuators.

MODEL	DN	Kvs	MAX DIFFERENTIAL PRESSURE bar					OTHER FEATURES
			MVE506	MVE510	MVE515	MVH	MVH56FA MVH56FC	
2FGB65B	65	63	10,8	16	16	16	14	- G25 cast iron body, brass plug - PN16 flanged connections - Fluid temperature: -10[1] to 150°C - Equal-percentage control characteristic - Leakage 0.03% Kvs
2FGB80B	80	100	8	16	16	16	10,6	
2FGB100B	100	130	5,3	13,9	16	16	7,4	
2FGB125B	125	200	3,5	10,4	16	16	5,1	
2FGB150B	150	300	2,1	7,8	15	12,9	3,5	
2FSA-25BR4	25R	4	25	25	25	25	25	- Spheroidal cast iron body, stainless steel internal parts - PN25 flanged connections - Fluid temperature: -10[1] to 230°C - Equal-percentage control characteristic - Leakage 0.02% Kvs
2FSA-25BR7	25I	6.3	25	25	25	25	25	
2FSA25B	25	10	25	25	25	25	25	
2FSA32B	32	16	25	25	25	25	25	
2FSA40B	40	25	24,9	25	25	25	25	
2FSA50B	50	40	18,3	25	25	25	25	
2FSA65B	65	63	12,2	25	25	25	17,6	
2FSA80B	80	100	8,3	25	25	25	12,8	
2FAA25B	25	10	30	30	30	30	30	- Steel body and stainless steel internal parts - PN40 flanged connections - Fluid temperature: -20[1] to 230°C - Equal-percentage control characteristic - Leakage 0.02% Kvs
2FAA32B	32	16	30	30	30	30	30	
2FAA40B	40	25	27,6	30	30	30	30	
2FAA50B	50	40	21	30	30	30	28,1	
2FAA65B	65	63	14,9	30	30	30	20,4	
2FAA80B	80	100	11	29,6	30	30	15,5	
2FAA100B	100	160	6,5	19,1	30	30	9,5	
2FAA125B	125	200	4,2	14,3	27,6	23,3	6,6	

- *In order to avoid seat & plug wearing issues we recommend not to exceed 2 bar (2FGBB) & 8 bar (2FSA) & 12 bar (2FAAB) differential pressure.*

1. *For applications with possible ice formation on stem and packing, use the stem heater.*

2-way Double-seat Valves

Series 2FGA.B-2FAA.B - Stroke 45 mm - To be motorised by MVH-MVE actuators.

MODEL	DN	Kvs	MAX DIFFERENTIAL PRESSURE bar				OTHER FEATURES
			MVE510	MVE515	MVH	MVH56FA MVH56FC	
2FAA150B (PN25)	150	300	9,5	20,3	17,1	2,9	- Fe 52 Steel body and stainless steel internal parts - PN40 flanged connections - Fluid temperature: -10[1] ÷ 230°C - Equalpercentage control characteristic - Leakage 0.12% Kvs
2FGA200B (PN16)	200	500	12	16	16	3,7	- G25 cast iron body, stainless steel internal parts - PN16 flanged connections - Fluid temperature: -10[1] to 200°C - Equalpercentage control characteristic - Leakage 0.02% Kvs

1. *For applications with possible ice formation on stem and packing, use the stem heater.*

Dymanic pressure independent control valves with threaded connections

VSX..PB/VSXT..PB pressure independent balancing & control valves can be used in heating and cooling systems in applications with Fan Coil Units, Chilled Beams or other terminal units applications. VSX..PB/VSXT..PB valves provide modulating control with full authority regardless of any fluctuations in the differential pressure of the system.
VSX..PB/VSXT..PB valves combine an externally adjustable automatic balancing valve, differential pressure control valve and a full authority modulating control valve.
VSX..PB/VSXT..PB valves make it simple to achieve 100% control of the water flow in the building, while creating high comfort and energy seving at the same time. An additional benefit is that no balancing is required if further stages are added to the system, or if the dimensioned capacity is changed.
Energy saving is due to optimal control, lower flow and pump pressure. Maximized ΔT is due to faster response and increased system stability.

Model	PN	Connection	Dimensions	Stroke [mm]	Min. flow [l/h]	Max. flow [l/h]	Max. differential pressure [kPa]
VSX03PB	25	G1/2"	DN10	2,5	30	200	600
VSXT03PB				5	65	370	
VSX05PB		G3/4"	DN15	2,5	100	575	
VSXT05PB				5	220	1330	
VSX06PB		G1"	DN20	2,5	100	575	
VSXT06PB				5,5	330	1800	
VSX03PBP*		G1/2"	DN10	2,5	30	200	
VSXT03PBP*				5	65	370	
VSX05PBP*		G3/4"	DN15	2,5	100	575	
VSXT05PBP*				5	220	1330	
VSX06PBP*		G1"	DN20	2,5	100	575	
VSXT06PBP*				5,5	300	1800	
VSXT07PBP*		G1 ¼"	DN25	5,5	600	3609	800
VSXT08PBP*		G1"½	DN32	5,5	550	4001	
VSXT09PBP*		G1 ½"F	DN40	15	1370	9500	
VSXT10PBP*		G2"F	DN50	15	1400	11500	

*** VSX(T)..PBP:** models with pressure plugs.

Valves with 2.5mm stroke: to be motorized by MCA24L, MCA230L, MVX52B actuators

Valves with 5 and 5.5mm stroke: to be motorized by MVT403S, MVT203S, MVT503S actuators. They can also be motorized by MCA24L, MCA230L, MVX52B actuators but in this case the actual max. flow is 75% of the max. flow values written in the spreadsheet above.

Valves with 15mm stroke: to be motorized by MVE_S actuators with 600N force

Dymanic pressure independent control valves with flanged connections

BV.. valves can be used in heating and cooling systems that require high flows together with an accurate control; they provide modulating control with full authority regardless of any fluctuations in the differential pressure of the system.
PICVs are 3 devices in one:
• Static Flow limiting valve: the flow of the fully open valve can be selected in a range from 30% to 100% by adjusting the dip-switches on the MVE515B and MVE215B actuators
• Globe Valve: the flow can be controlled from 0 up to the maximum set flow by moving the valve plug.
• Differential Pressure Controller with the main objective of keeping the pressure drop constant across the valve plug and consequently a flow control not dependent on differential pressure.
BV valves have an equipercentage characteristic.

Model	PN	P/T plugins	Connection	Stroke [mm]	Max. differential pressure [kPa]	Min. flow [l/h]	Max. flow [l/h]
BV50P	16	YES	DN50mm	20	600	1000	13000
BV65P			DN65mm			1900	21000
BV80P			DN80mm	40		2000	28000
BV100P			DN100mm			6000	50000
BV125P			DN125mm			6300	90000
BV150P			DN150mm			8000	145000

Valve body: ductile cast iron
Valve trim: stainless steel
Valve stem: stainless steel
Membrane: EPDM
Leakage rate: 0,02% of the Kvs
Fluids: chilled water, hot water, glycol (50% max.), from -10°C to 120°C.

BV valves are supplied with the proper actuator already assembled on the valve.
Suitable actuators:
MVE515B - 3pos. & Proportional, 1500N, 24Vac/dc
MVE215B - 3pos. & Proportional, 1500N, 230Vac
MVE515RB and MVE215RB models with emergency fail safe function can also be used.

Dynamic balancing eliminates overflows, regardless of fluctuating pressure conditions in the system.

			Compatible actuators and maximum flow rates (L/H)			
			MCA230L MCA24L MVX52B	MVT203S MVT403S MVT503S	MVE206S MVE506S	MVE215B MVE515B
PART# WITH P/T PLUGS	PART# WITHOUT P/T PLUGS	VALVE CONNECTION	ELECTRO-THERMAL 140N	ELECTRO-MECHANICAL 300N	ELECTRO-MECHANICAL 600N	ELECTRO-MECHANICAL 1500N
VSX03PBP	VSX03PB	1/2" M	200	-	-	-
VSXT03PBP	VSXT03PB	1/2" M	280	370	-	-
VSX05PBP	VSX05PB	3/4" M	575	-	-	-
VSXT05PBP	VSXT05PB	3/4" M	1000	1330	-	-
VSX06PBP	VSX06PB	1" M	575	-	-	-
VSXT06PBP	VSXT06PB	1" M	1350	1800	-	-
VSXT07PBP	-	1 ¼"M	2700	3600	-	-
VSXT08PBP	-	1 ½"M	3000	4000	-	-
VSXT09PBP	-	1 1/2"F	-	-	9500	-
VSXT10PBP	-	2"F	-	-	11500	-
BV50P	-	DN50mm	-	-	-	13000
BV65P	-	DN65mm	-	-	-	21000
BV80P	-	DN80mm	-	-	-	28000
BV100P	-	DN100mm	-	-	-	50000
BV125P	-	DN125mm	-	-	-	90000
BV150P	-	DN150mm	-	-	-	145000

Series 3T (threaded) - **PN16** - Stroke 11.5 mm. To be motorised by MVB (3TGB.B) - MVE.S (3TGB.F) actuators.

MODEL	DN	Kvs	MAX DIFFERENTIAL PRESSURE bar	ACTUATORS	OTHER FEATURES
3TGB15BR2	1/2"	1.6	16	For MVB actuator (or MVT203,403,503 using AG74 adapter)	- GJL-250 cast-iron body - Brass internal parts - Equal-percentage control flow characteristic - Leakage 0 to 0.001% Kvs - Female threaded connections: fluid temperature -5[1] to 140 °C, with MVB max 120°C (140 °C with MVB+MVBHT)
3TGB15BR3	1/2"	2.5			
3TGB15B	1/2"	4			
3TGB15FR2	1/2"	1.6	16	For MVE.S actuator	
3TGB15FR3	1/2"	2.5			
3TGB15F	1/2"	4			

- *In order to avoid seat & plug wearing issues we recommend not to exceed 4 bar differential pressure.*

1. *For applications with possible ice formation on stem and packing, use the stem heater.*

Series VMB (threaded) - VMBF (flanged) - **PN16**. To be motorised by MVB - MVE - MVH actuators. - Thermal insulation available.

MODEL	DN	Kvs	MAX DIFFERENTIAL PRESSURE bar						OTHER FEATURES
			MVB	MVE506	MVE510	MVE515	MVH	MVH56FA MVH56FC	
VMB3	3/4"	6.3	2,6	13,1	16	16	16	15,6	- G 25 cast-iron body - Brass internal parts - Female threaded connections - Fluid temperature: -10[1]÷150°C (with MVB max 120 °C, with MVB+MVBHT max 140 °C) - Control characteristic: equal-percentage on direct way, linear on angle way - Leakage 0.03% Kvs - For MVE actuator, add AG52 linkage - For MVH actuator, add AG62 linkage
VMB4	1"	10	1,7	8,7	15,6	16	16	10,3	
VMB5	1¼"	16	1,1	5,4	9,8	15,4	13,7	6,5	
VMB6	1½"	22	0,8	3,9	7,1	11,1	9,9	4,7	
VMB8	2"	30	0,6	2,9	5,4	8,4	7,5	3,5	
VMB8A	2"	40	0,6	2,9	5,4	8,4	7,5	3,5	
VMB3F	20	6.3	2,6	13,1	16	16	16	15,6	As above with NP16 slip-on flanges
VMB4F	25	10	1,7	8,7	15,6	16	16	10,3	
VMB5F	32	16	1,1	5,4	9,8	15,4	13,7	6,5	
VMB6F	40	22	0,8	3,9	7,1	11,1	9,9	4,7	
VMB8F	50	30	0,6	2,9	5,4	8,4	7,5	3,5	
VMB8AF	50	40	0,6	2,9	5,4	8,4	7,5	3,5	

- *In order to avoid seat & plug wearing issues we recommend not to exceed 2 bar differential pressure.*

1. *For applications with possible ice formation on stem and packing, use the stem heater.*

Tight Close-Off

Series VMBPM threaded valves - Tight close-off modulating valves **PN16** - Thermal insulation available - To be motorised by MVB actuators.

MODEL	DN	Kvs	STROKE mm	MAX DIFFERENTIAL PRESSURE bar	OTHER FEATURES
VMBP3M	3/4"	6.3	16.5	8.8	- G25 cast iron valve body - Fluid temperature -5 to 95°C - Leakage 0% Kvs
VMBP4M	1"	10	16.5	5.5	
VMBP5M	1 ¼"	16	16.5	3.5	
VMBP6M	1 ½"	25	16.5	2.5	
VMBP8M	2"	40	16.5	1.8	

- *In order to avoid seat & plug wearing issues we reccomend not to exceed 2 bar differential pressure.*

Series VMB.T in G25 cast-iron **PN16 -** Stroke 5,5mm - To be motorised by MVT203,403,503 actuators

MOD	DN	Kvs	MAX DIFF PRESSURE [kPa]		OTHER FEATURES
		A-AB	A-AB	B-AB	
VMB3T	3/4"	6,3	900	700	- G25 cast iron body - Fluid temperature 5 to 95 °C - Linear control characteristic - Leakage: direct way <0.03% Kvs angle way < 2% Kvs
VMB4T	1"	10	550	450	
VMB5T	1 ¼"	14	350	300	
VMB6T	1 ½"	18	250	200	
VMB8T	2"	25	190	160	

- *Old VMBT3, VMBT4, VMBT5, VMBT6, (motorized by MVT44,28,56,57 actuators) still available as spare parts.*

3TBB Series = 3-way valves, mixing or diverting, bronze valve bodies with threaded connections, brass plug, stainless steel stem. Temperature applications -10°C to 130°C. Rangeability 50:1.
To be motorised by MVE and MVH actuators (no adapter needed).
1/2" and 3/4" models are tight close-off. Maximum leakage on 1" to 2" models is 0.1% of Kvs.
Stroke on 1/2" and 3/4" models is 9.5mm. Stroke on 1" to 2" models is 16mm.

MODEL	DN	Kvs	MAX DIFFERENTIAL PRESSURE (bar)			
			MVE506	MVE510	MVE515	MVH56FA MVH56FC
3TBB15	1/2"	2,5	16	16	16	16
3TBB20	3/4"	5	16	16	16	16
3TBB25	1"	10	9,7	16	16	11,7
3TBB32	1 ¼"	16	6,1	11,2	16	7,3
3TBB40	1 ½"	25	4,2	7,7	12,1	5
3TBB50	2"	38	2,3	4,2	6,7	2,8

Upon Request

Variants available to be motorized with MVT 300N actuators (see page 35) by means of AG73 linkage kit.

VSB/VMB valves with male threaded connections "PS81"

Series 3F **PN16-25** - Stroke 16.5 mm (DN25), 25mm (DN32-65), 45mm (DN80-150) - To be motorised by MVE-MVH actuators.

MODEL	DN	Kvs	MAX DIFFERENTIAL PRESSURE bar						OTHER FEATURES
			MVE506	MVE510	MVE515	MVH	MVH3K	MVH56FA MVH56FC	
3FGB25R4	25 R	4	7	12,7	16	16	16	8,4	- G25 cast-iron body brass internal parts - PN16 flanged connections - Fluid temperature: - 10[1] to 150 °C - Control flow characteristic: direct way: equal-percentage, angle way: linear - Leakage: direct-way: 0.03% Kvs, angle way: 2% Kvs
3FGB25R7	25 I	6.3	7	12,7	16	16	16	8,4	
3FGB25	25	10	7	12,7	16	16	16	8,4	
3FGB40R19	40 R	19	3,9	7,1	11,1	9,9	16	4,7	
3FGB40	40	25	3,9	7,1	11,1	9,9	16	4,7	
3FGB50	50	40	2,5	4,5	7,1	6,3	14,4	3	
3FGB65	65	63	1,5	2,7	4,2	3,7	8,5	1,7	
3FGB80	80	100	0,9	1,7	2,7	2,4	5,6	1,1	
3FGB100	100	130	0,6	1,1	1,7	1,5	3,6	0,7	
3FGB125	125	200	0,4	0,7	1,1	1	2,3	0,4	
3FGB150	150	300	0,2	0,5	0,7	0,7	1,6	0,3	
3FSA25R4	25 R	4	9,5	22,2	25	25	25	12,5	- G-308 spheroidal cast-iron body stainless steel internal parts - PN25 flanged connections - Fluid temperature: -10[1] to 230 °C - Control flow characteristic: equalpercentage (DN25÷65) linear (DN80), angle way linear - Leakage 0.02% Kvs
3FSA25R7	25 I	6.3	4,7	11,2	19,3	16,9	25	6,3	
3FSA25	25	10	4,7	11,2	19,3	16,9	25	6,3	
3FSA32	32	19	3,1	7,5	13	11,4	25	4,2	
3FSA40	40	25	2,2	5,4	9,4	8,2	20,8	3	
3FSA50	50	40	1,3	3,4	5,9	5,2	13,3	1,8	
3FSA65	65	63	0,7	1,9	3,4	3	7,8	1	
3FSA80	80	110	0,7	1,5	2,2	2,2	5,3	0,9	
3FSA25SR4	25 R	4	5	5	5	5	5	5	- G 308 spheroidal cast-iron body stainless steel internal parts with bellows seal - PN25 flanged connections - Fluid temperature: -10[1] to 300 °C - Control flow characteristic: equal percentage (DN25÷65) linear (DN80), angle way linear - Leakage 0.02% Kvs
3FSA25SR7	25 I	6.3	5	5	5	5	5	5	
3FSA25S	25	10	5	5	5	5	5	5	
3FSA32S	32	16	4,7	5	5	5	5	5	
3FSA40S	40	25	3,4	5	5	5	5	4,2	
3FSA50S	50	40	2,2	4,2	5	5	5	2,7	
3FSA65S	65	63	1,3	2,5	4	3,5	5	1,6	
3FSA80S	80	110	0,8	1,6	2,6	2,3	5	1	

- *In order to avoid seat & plug wearing issues we recommend not to exceed 2 bar (3FGB) & 8 bar (3FSA & 3FSAS) differential pressure.*

1. *For applications with possible ice formation on stem and packing, use the stem heater.*

MODEL	DN	Kvs	MAX DIFFERENTIAL PRESSURE bar						OTHER FEATURES
			MVE506	MVE510	MVE515	MVH	MVH3K	MVH56FA MVH56FC	
3FGB65L	65	63	1,5	2,7	4,2	3,7	8,5	1,7	Same as 3FGB but **leakage < 0.01% Kvs**
3FGB80L	80	100	0,9	1,7	2,7	2,4	5,6	1,1	
3FGB100L	100	130	0,6	1,1	1,7	1,5	3,6	0,7	
3FGB125L	125	200	0,4	0,7	1,1	1	2,3	0,4	
3FGB150L	150	300	0,2	0,5	0,7	0,7	1,6	0,3	

Series 3F **PN40** - Stroke 16.5 mm (DN25), 25mm (DN32-65), 45mm (DN80-125) - To be motorised by MVE-MVH actuators.

MODEL	DN	Kvs	MAX DIFFERENTIAL PRESSURE bar						OTHER FEATURES
			MVE506	MVE510	MVE515	MVH	MVH3K	MVH56FA MVH56FC	
3FAA25R4	25 R	4	6	13	21,7	19,2	30	7,7	- Fe 52 steel body stainless steel internal parts - PN40 flanged connections - Fluid temperature: -10[1] to 230 °C - Control flow characteristic: linear - Leakage 0.02% Kvs
3FAA25R7	25 I	6.3	6	13	21,7	19,2	30	7,7	
3FAA25	25	10	6	13	21,7	19,2	30	7,7	
3FAA32	32	16	3,8	8,2	13,7	12,1	30	4,8	
3FAA40	40	22	2,4	5,3	9	7,9	19,4	3,1	
3FAA50	50	40	1,7	3,7	6,3	5,6	13,7	2,2	
3FAA65	65	70	1	2,2	3,7	3,3	8,1	1,3	
3FAA80	80	110	0,6	1,4	2,4	2,1	5,3	0,8	
3FAA100	100	140	0,4	0,9	1,5	1,4	3,4	0,5	
3FAA125	125	250	0,2	0,6	1	0,8	2,1	0,3	
3FAA25PR4	25 R	4	6	13	21,7	19,2	30	7,7	- Fe 52 steel body internal parts in AISI 316 stainless steel with grease-cap and special seals for high temperature - PN40 flanged connections - Fluid temperature: - 20[1] to 350 °C - Control flow characteristics: linear - Leakage 0.02% Kvs
3FAA25PR7	25 I	6.3	6	13	21,7	19,2	30	7,7	
3FAA25P	25	10	6	13	21,7	19,2	30	7,7	
3FAA32P	32	16	3,8	8,2	13,7	12,1	30	4,8	
3FAA40P	40	22	2,4	5,3	9	7,9	19,4	3,1	
3FAA50P	50	40	1,7	3,7	6,3	5,6	13,7	2,2	
3FAA65P	65	70	1	2,2	3,7	3,3	8,1	1,3	
3FAA80P	80	110	0,6	1,4	2,4	2,1	5,3	0,8	
3FAA100P	100	140	0,4	0,9	1,5	1,4	3,4	0,5	
3FAA125P	125	250	0,2	0,6	1	0,8	2,1	0,3	

- *In order to avoid seat & plug wearing issues we recommend not to exceed 12 bar differential pressure.*

1. *For fluid applications with temperature below -10 °C, when ordering, add "T" , instead of "P" to model, e.g. 3FAA40T*

"PS89"
2FGB - 3FGB valves with grooved connections suitable to Victauilic clamps
For example: 3FGB65PS89

3FGB valves with stainless steel plug
3FGB valves are also available with stainless steel plug and stainless steel stem packing, both AISI 304. Just add PS73 at the end of the part-number, for example: 3FGB65PS73

NEW

3FIA series

3-way mixing globe valves PN16, PN40 with stainless steel body and internal parts.
Fluid temperature range: –30°C to +180 °C
PN16 models: DN65, 100
PN40 models: DN25, 32, 40, 50, 80
Linear flow characteristic, V-port plug
3FIA valves are motorized by MVE actuators
(assembled on the valve in our factory, please include "MVEAV-10" code).

MODEL	DN (inches)	FLOW RATE KVS (m3/h)	STROKE (mm)
3FIA25	1"	10	
3FIA32	1" 1/4	16	
3FIA40	1" 1/2	24	
3FIA50	2"	42	20
3FIA65	2" 1/2	63	
3FIA80	3"	91	
3FIA100	4"	138	

MATERIALS	
Valve Body	Stainless steel AISI 316 ASTM CF8M
Trim (plug-seat)	316L
Stem	316L
Stem Packing	PTFE
Plug and Seat sealing	PTFE
Actuator	See data sheets for MVE actuator and MVh actuator
Actuator Yoke	Aluminium
Valve/Actuator connection	U-bolt connection

MAX DIFFERENTIAL PRESSURE (bar)					
Part#	DN	600N	1000N	1500N	2200N
3FIA25	25	10	-	-	-
3FIA32	32	5,7	-	-	-
3FIA40	40	4	6,7	-	-
3FIA50	50	2,3	3,9	-	-
3FIA65	65	-	2,4	3,6	-
3FIA80	80	-	-	2,9	4,3
3FIA100	100	-	-	-	2,4

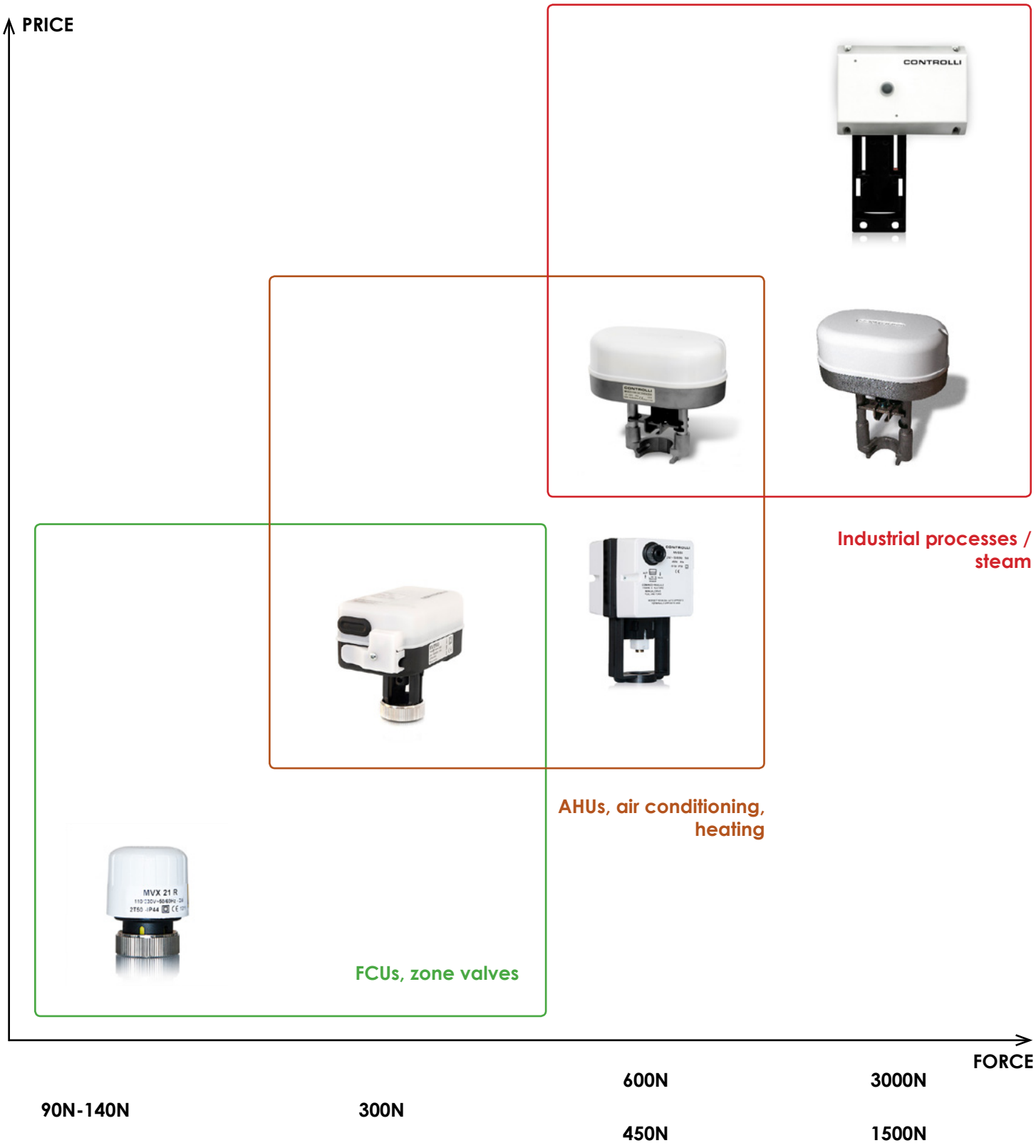
PRICE
CONTROLLI
Industrial processes / steam
AHUs, air conditioning, heating
MVX 21 R
FCUs, zone valves
FORCE
90N-140N
300N
600N
450N
3000N
1500N

Actuators for Zone Valves and Terminal Unit Valves 200 N

Series MVT2./4. - Bidirectional type - Stroke 5.5 mm, stroke time 117 s. - For V.XT - V.BT valve bodies - Protection IP43.
Series MVT5. - Bidirectional type with microprocessor module for proportional signal Vdc - 24 Vac power supply - Stroke 5 mm to 5,5 mm, stroke time 117 s. - For V.XT - V.BT valve bodies - Protection IP43.

MODEL	POWER SUPPLY Vac	CONSUMPTION VA	OTHER FEATURES
MVT28	230	5	3-position control
MVT44	24	0.5	3-position control
MVT56	24	1	0 to 10/ 6 to 10/ 1 to 5/ 2 to 10/ 4 to 7/ 6 to 9/8 to 11 Vdc proportional control - direct/reverse action
MVT56L	24	1	Same as MVT56 but Stroke 8,5 mm
MVT56S	24	1	Same as MVT56 but Stroke 5 mm
MVT57	24	1	0 to 10 Vdc - proportional control - only direct action

Globe Valve Actuators 450 N

Series MVB - Bidirectional motor for V.B threaded ½" to 2" and flanged 15 to 50 mm valve bodies - Supplied with linkage for mounting on 2T-3T and V.B-V.BF valve bodies - IP50 protection.

MODEL	TIMING s.	SUPPLY Vac	CON-SUMPTION VA	OTHER FEATURES
MVB22	37	230	5	on/off, floating
MVB26	60	230	5	
MVB28	370	230	5	
MVB46	60	24	5	
MVB46P	As MVB46 with 1 kOhm auxiliary potentiometer			
MVB36	60	24	5	proportional potentiometric
MVB52	37	24	5	Vdc/ current proportional control. Ranges: 6 to 9, 4 to 7, 8 to 11, 0 to 10, 2 to 10, 1 to 5 Vdc, 4 to 20 mA. Default setting: 0 to 10Vdc
MVB56	60	24	5	
MVBAV	MVB mounting on valvebody			

MVT *300 Newton*

Compact Actuator

Electric bidirectional actuator with compact dimensions suitable to valves with hot or cool water used in a variety of applications including FCUs, AHUs, zone control systems, solar plants, small heating and cooling plants, small re-heating and dehumidification coils.
Force is 300N i.e. it provides 50% more force than standard MVT actuators that means higher close-off performances. It is easy to fit the actuator on Controlli valves.
Further more, thanks to self-stroking feature and 17mm long stroke, these new MVT 300N actuators can be used to retrofit actuators from other manufacturers, for example actuators for MZX, VZX, MEU, FEU, VEU Satchwell valves. Additionally, they can be used to motorize a number of PICVs available in the market.
Please contact export@controlli.eu for a comprehensive list of manufacturers.

MVT 300N actuators can be controlled by either proportional (modulating) signals or by an increase/decrease (floating) signal.
On all models, PC Board is equipped with two micro-switches detecting the complete open and complete closed positions.

Two versions are available:
SHORT: up to 9mm yoke, self stroking, only pushing
LONG: up to 17mm yoke, self stroking, push & pull

Timing:
60seconds on 5,5 mm stroke valves e.g. VMBT
90seconds on 8,5 mm stroke valves e.g. 2TGA..B

IP43 protection class.
Manual override by means of a 3mm Allen key.

Proportional actuators can be connected to any controller with 0..10Vdc, 2..10Vdc, 0..5Vdc, 6..10Vdc, 4..20mA signal.
Feedback signal: 2..10Vdc (2V=fully retracted; 10V= fully extended)

Proportional actuators are equipped with 3 LEDs visible under the cover
- Green for Power On
- Yellow for opening action
- Red for closing action

Direct / reverse action: actuator movement direction can be selected via a dip-switch.

					VALVES WITH SPRING			VALVES WITHOUT SPRING		
	MODEL	CONTROL SIGNAL	POWER SUPPLY	IP	VSXT / VMXT / VTXT VALVES FOR FCUS 1/2" TO 3/4" STROKE 5,5mm	VSBT_ / VMBT_ GLOBE VALVES 3/4" TO 1" 1/2 STROKE 5,5mm	2TGA..B VALVES WITH HIGH CLOSE-OFF 3/4" TO 2" STROKE 8,5mm	VSB_T / VMB_T GLOBE VALVES 3/4" TO 2" STROKE 5,5mm	VALVES FROM OTHER MANUFACTURERS UP TO 17mm STROKE	2-3TGB.B GLOBE VALVES 1/2" STROKE 11,5mm
SHORT YOKE, ONLY PUSHING	MVT203S	3POS.	230VAC	IP43	●	●	●	-	-	-
	MVT403S		24VAC		●	●	●	-	-	-
	MVT503S	PROP.			●	●	●	-	-	-
LONG YOKE, PULLING & PUSHING	MVT203	3POS.	230VAC	IP43	-	-	-	●	●	● (AG74-03)
	MVT403		24VAC		-	-	-	●	●	● (AG74-03)
	MVT503	PROP.			-	-	-	●	●	● (AG74-03)

UP TO 2200N FORCE!

MVE

Universal Actuator for globe valves

The MVE is a flexible electro-mechanical actuator for the control of two and three way globe valves in: Heating and Cooling systems, Air handling units, District Heating plants, Industrial Temperature Control systems. The MVE can be controlled either by a proportional (modulating) signal or by an increase/decrease (Floating) signal simply changing switch settings on the field. It is designed for an easy installation to any CONTROLLI flanged valve. Linkage kits are available for threaded valves as well as for valves of other manufacturers.
The Actuator has a fine resolution (500 steps on the full stroke range) for a very accurate fluid control and it is able to self-calibrate on a different stroke without the need of any user action. A Plug&Play function is available as well calibrating the actuator on the valve at the very first power-on only. The MVE implements an smart control algorithm with self diagnostic and alarm functionality in case of unexpected operation, feedback of alarms to the user is provided by LEDs (Green and Red) on the control board.
MVE is available with standard yoke and with a compact yoke for applications where compact dimensions are required and each version can be available with close-off force 600 N, 1000 N and 1500 N.

MVE5.. - MVE5..S
MVE is available with very low voltage power supply 24 Vac or 24Vdc.
MVE2.. - MVE2..S
MVE is also available with high voltage power supply 230Vac with the same functionality of the 24Vac/dc
MVE2... - MVE2...S are not UL Listed.

MODEL		TIMING [s]				POWER SUPPLY		FORCE [N]	MORE FEATURES
		STROKE [mm]			3P.				
		5/15	15/25	25/60		MVE5..	MVE2..		
MVE506	MVE206	15	20	30	60	24Vac/dc	230Vac	600	Control 3p floating and proportional switch selectable. Control range 0..10 Vdc, 2..10 Vdc, 0..5 Vdc, 5..10 Vdc, 2..6 Vdc, 6..10 Vdc and 4-20 mA **STROKE 5-60** mm
MVE510	MVE210							1000	
MVE515	MVE215							1500	
MVE522	MVE222							2200	
MVE506S	MVE206S							600	Control 3p floating and proportional switch selectable. Control range 0..10 Vdc, 2..10 Vdc, 0..5 Vdc, 5..10 Vdc, 2..6 Vdc, 6..10 Vdc and 4-20 mA **STROKE 5-30** mm **Short Yoke.**
MVE510S	MVE210S							1000	
MVE515S	MVE215S							1500	
MVE522S	MVE222S							2200	
MVEAV		MVE assembly on valve body							

MVE R

Electric actuators with Emergency fail safe function

All features such as input/output signals, automatic or manual calibration, diagnostic, resolution, auxiliary end switches, manual override etc. are the same as standard MVE actuators. Additionally MVE R provide electronic emergency function based on super-capacitor technology in the event of a power failure.
Emergency position **(retracted or extended stem)** selectable with jumper setting on the pcboard.
Opening/closing times, also in case of emergency return: approx. 1mm/s for proportional control or 60s (regardless of valve stroke) for floating control.
One model provides both stem up / stem down options, through jumper setting.
Charging time about 130s.
Super-capacitor life: 10 years

MVE R actuators can be controlled either by a proportional (modulating) signal or by an increase/decrease (floating) signal.
It is easy to mount and connect the actuator onto a valve. Direct mounting is possible to any CONTROLLI flanged valve. Linkage kits are available for CONTROLLI threaded valves as well as for valves of other manufacturers.
Thanks to self stroking functionality and availability of various linkage kits, these actuators can also fit on many valves from other manufacturers.

MVE_R actuators have an excellent resolution (500 steps along the whole stroke range) for very accurate flow control and are able to self-calibrate on different stroke values without any operation by the installer (this function is DIP switch selectable on site).

More over, MVE_R actuators are provided with a self diagnostic functionality very useful in case of unexpected situations and in such an event the green and red LEDs on the electronic board will blink. Examples of faulty conditions that are detected:

- stroke out of range 5-60mm;
- unexpected stall condition (e.g. valve is stuck);
- missing expected stall condition (e.g. valve/actuator connection is loose);
- voltage supply out of range.

MODEL		TIMING [s]				POWER SUPPLY		FORCE [N]	IP	MORE FEATURES
		STROKE [mm]			3P					
		5/15	15/25	25/60		MVE5..	MVE2..			
MVE506R	MVE206R	15s	20s	25s	60s	24 Vac/dc	230 Vac	600	IP54	Control 3p floating and proportional switch selectable. Control range 0..10 Vdc, 2..10 Vdc, 0..5 Vdc, 5..10 Vdc, 2..6 Vdc, 6..10 Vdc and 4-20 mA **STROKE 5-60 mm** Emergency position (stem up / stem down) selectable with jumper setting on the PCBA Supercapacitor charging time after power off 130s
MVE510R	MVE210R							1000		
MVE515R	MVE215R							1500		
MVE506SR	MVE206SR							600		Control 3p floating and proportional switch selectable. Control range 0..10 Vdc, 2..10 Vdc, 0..5 Vdc, 5..10 Vdc, 2..6 Vdc, 6..10 Vdc and 4-20 mA **STROKE 5-30 mm. Short Yoke.** Emergency position (stem up / stem down) selectable with jumper setting on the PCBA Supercapacitor charging time after power off 130s
MVE510SR	MVE210SR							1000		
MVE515SR	MVE215SR							1500		
MVEAV		MVE assembly on valve body								

Globe Valve Actuators 1500 N-3000 N

Series MVH - For all valve bodies, self-adjusting stroke 10 to 45 mm (9 to 50 mm for MVH56F) - For VSB-VSB.F VMB-VMB.F valves only, add linkage AG62, - Manual override - Protection IP55.

MODEL	TIMING DEPENDING ON VALVE STROKE (seconds)			SUPPLY Vac	CON-SUMPTION VA	FORCE N	ACTION
	16.5	25	45				
MVH26	22	33	60	230	12	1500	on/off floating
MVH46	22	33	60	24	12		
MVH36	22	33	60	24	12		proportional potentiometric
MVH56	22	33	60	24	12		proportional control selectable range for industrial applications
MVH56F	26	40	70	24	12		3-position and/or proportional control (selectable) Ranges: 6 to 9/4 to 7/8 to 11/0 to 10/2 to 10/1 to 5 Vdc; current 4 to 20 mA. Default setting: 0 to 10Vdc
MVH3K	26	40	70	24	25	3000	
MVHAV	MVH assembly on valve body						

Globe Valve Actuators with Spring Return 700 N

Series MVH - For all valve bodies, self-adjusting stroke 9 to 50 mm - Direct-reverse action - For VSB-VSBF VMB-VMBF valves only, add linkage AG62 - Protection IP55.

MODEL	TIMING DEPENDING ON VALVE STROKE (seconds)[1]			SUPPLY Vac	CON-SUMPTION VA	ACTION	OTHER FEATURES
	16.5	25	45				
MVH56FA	17 (45)	25 (60)	48 (114)	24	15	Vdc/ mA proportional control or floating control. Default setting: 0 to 10Vdc	with spring return stem up
MVH56FC	17 (45)	25 (60)	48 (114)	24	15		with spring return stem down

1. *The values in brackets indicate the return time by spring return. By spring return: MVHFA closes two-way valves and direct way in three-way valves, MVHFC opens two-way valves and direct way in three-way valves. This is valid for all valves except 2FGA-2FGA.B-2FAA-2FAA150B in which it happens the opposite.*

Action of spring return on power failure

2 WAY VALVES		
SPRING ACTION ON POWER FAILURE		
VALVE	MVH56FA	MVH56FC
VSB	VALVE CLOSED	VALVE OPEN
VSB.F	VALVE CLOSED	VALVE OPEN
2TBB	VALVE CLOSED	VALVE OPEN
2FGB	VALVE CLOSED	VALVE OPEN
2FGA	VALVE OPEN	VALVE CLOSED
2FSA	VALVE CLOSED	VALVE OPEN
2FAA	VALVE OPEN	VALVE CLOSED
2FAA.P	VALVE OPEN	VALVE CLOSED
2FGB.B	VALVE CLOSED	VALVE OPEN
2FSA.B	VALVE CLOSED	VALVE OPEN
2FAA.B	VALVE CLOSED	VALVE OPEN
2FAA150B/2FGA200B	VALVE OPEN	VALVE CLOSED

3 WAY VALVES		
SPRING ACTION ON POWER FAILURE		
VALVE	MVH56FA	MVH56FC
VMB	DIRECT WAY CLOSED	DIRECT WAY OPEN
VMB.F	DIRECT WAY CLOSED	DIRECT WAY OPEN
3TBB	DIRECT WAY CLOSED	DIRECT WAY OPEN
3FGB	DIRECT WAY CLOSED	DIRECT WAY OPEN
3FSA	DIRECT WAY CLOSED	DIRECT WAY OPEN
3FSA.S	DIRECT WAY CLOSED	DIRECT WAY OPEN
3FAA	DIRECT WAY CLOSED	DIRECT WAY OPEN
3FAA.P	DIRECT WAY CLOSED	DIRECT WAY OPEN

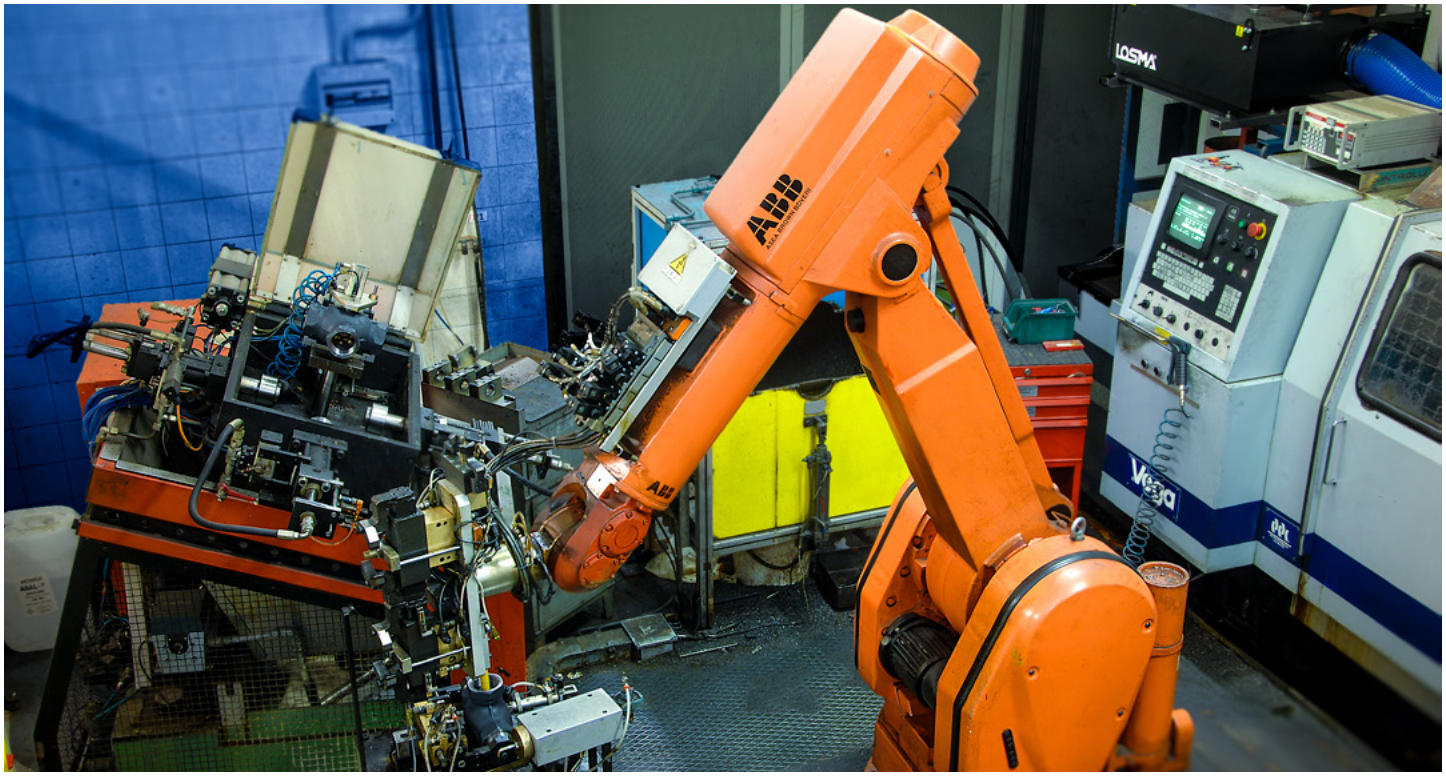

MODEL	DESCRIPTION
AF24	LINKAGE KIT FOR MDL ON VALVES VFA DN25-100
AF25	LINKAGE KIT FOR MDL ON VALVES VFA DN125-200
AG22	LINKAGE KIT FOR MVB ON V500
AG40	LINKAGE KIT FOR MVB ON VB7200/7300
AG51	LINKAGE KIT FOR MVE-MVH ON VALVES SS-VS-DS-VM-3V AND VMB16-VBG-VSG
AG52	LINKAGE KIT FOR VALVES MVE ON THREADED VALVES VSB-VMB E VSB.F-VMB-F
AG53	LINKAGE KIT FOR MVE ON VALVES **SATCHWELL**
AG54	LINKAGE KIT FOR MVH ON VALVES **SATCHWELL**
AG60-07	LINKAGE KIT FOR MVE ON VALVES **DANFOSS**
AG60-10	LINKAGE KIT FOR MVE ON VALVES **HONEYWELL**
AG62	LINKAGE KIT FOR MVH ON VALVES THREADED VSB-VMB E VSB.F-VMB-F
AG63	LINKAGE KIT FOR MVE.S ON VALVES THREADED VSB-VMB E VSB.F-VMB-F
AG64	LINKAGE KIT FOR MVH ON OLD VALVES SS-DS-VM-3V DN15÷65 LINKAGE KIT FOR MVLHT
AG65	LINKAGE KIT FOR MVH ON OLD VALVES SS-DS-VM-3V DN ≥80 LINKAGE KIT FOR MVLHT
AG66	LINKAGE KIT FOR MVE ON VALVES **JOHNSON LINKAGE KIT FORTROL** VB7816
AG69	LINKAGE KIT FOR MVE ON VALVES **MUT**
AG72	LINKAGE KIT FOR MVA ON VALVES MICRA
AG73	LINKAGE KIT FOR MVT203, MVT403, MVT503 ON VALVES **SATHCWELL** MZX, VZX, FEU, MEU, VEU
AG70-10/70-14	LINKAGE KIT FOR MVE ON VALVES **SIEMENS**
AM71	LINKAGE KIT FOR MDB ON SHOE VALVES **LAZZARI**
AM72	LINKAGE KIT FOR MDB ON SHOE VALVES M3 & M4
AG74-03	LINKAGE KIT FOR MVT203/403/503 ON VALVES 2/3TGB.B

Insulation Jackets for 2 &3 way valves

(Supplied separately from the valve body, mounting to be arranged by the user)

MODEL	DESCRIPTION
54304-01	THERMAL INSULATION FOR VSXT09P-VSXT10P-VSXT11P-VSXT12P-VSXT13P-VSXT1P
54304-02	THERMAL INSULATION FOR VSXT21P
54304-03	THERMAL INSULATION FOR VMXT09P-VMXT10P-VMXT11P-VMXT12P-VMXT13P-VMXT1P
54304-04	THERMAL INSULATION FOR VMXT21P
54304-05	THERMAL INSULATION FOR VTXT09P-VTXT10P-VTXT11P-VTXT12P-VTXT13P-VTXT1P
54304-06	THERMAL INSULATION FOR VTXT09P4-VTXT10P4-VTXT11P4-VTXT12P4-VTXT13P4-
54304-07	THERMAL INSULATION FOR VTXT21P
54304-08	THERMAL INSULATION FOR VSXT24P-VSXT26P
54304-09	THERMAL INSULATION FOR VMXT24P-VMXT26P
54304-10	THERMAL INSULATION FOR VTXT24P-VTXT26P
GVB15	THERMAL INSULATION FOR 3TGB15B/F
GVB3	THERMAL INSULATION FOR VSB3-VMB3-VSB3F-VMB3F-VSBT3-VMBT3 DN3/4"2-3TBB20
GVB4	THERMAL INSULATION FOR VSB4-VMB4-VSB4F-VMB4F-VSBT4-VMBT4 DN1" 2-3TBB25
GVB5	THERMAL INSULATION FOR VSB5-VMB5-VSB5F-VMB5F-VSBT5-VMBT5 DN1 ¼" 2-3TBB32
GVB6	THERMAL INSULATION FOR VSB6-VMB6-VSB6F-VMB6F-VSBT6- VMBT6 DN1 ½" 2-3TBB40
GVB8	THERMAL INSULATION FOR VSB8-VMB8 VSB8F- VM8F DN2" KV30 2-3TBB50
GVB8A	THERMAL INSULATION FOR VSB8A-VMB8A-VSB8AF-VMB8AF DN2" KV40
GVB50	THERMAL INSULATION FOR 2FGB50 AND 3FGB50
GVB65	THERMAL INSULATION FOR 2FGB65 AND 3FGB65
GVB80	THERMAL INSULATION FOR 2FGB80 AND 3FGB80
GVB100	THERMAL INSULATION FOR 2FGB100 AND 3FGB100
GVB125	THERMAL INSULATION FOR 2FGB125 AND 3FGB125
GVB150	THERMAL INSULATION FOR 2FGB150 AND 3FGB150

Accessories for
MVB - MVE - MVH - MVHF - Actuators

MODEL	DESCRIPTION
244	Stem heater 24Vac for MVB actuators on VSB, VMB, VSB_F, VMB_F valves
248	Stem heater 24Vac for MVH and MVE actuators with threaded or flanged valves
D36	One stroke-end auxiliary microswitch adjustable on the whole stroke for MVB
DMDA	Two auxiliary microswitches for MDA (PAG.42)
DMVE	Two auxiliary microswitches for MVE-MVH..F
DMVH	Two auxiliary microswitches adjustable on the whole stroke for MVH
MVBC	Rain-proof protection
MVBD	Microswitch driven by manual control knob. Supplied only factory-mounted
MVBHT	Spacer for MVB. To be used with V.B/V.BF valves with temperature from 120 to 140 °C
MVHFS5	Selection module for 4 to 20 mA range for MVHF (supplied with the actuator)
MVHT	Spacer for high temperature for MVH. To be used with valve bodies with fluid temperature higher than 150°C (2F-3F)
MVHPA2	1000 Ohm auxiliary potentiometer for MVH26
MVHPA4	1000 Ohm auxiliary potentiometer for MVH46

1. All accessories, except MVBD, are supplied separately. Mounting is carried out by the user.

Flanges Options

MODEL	DESCRIPTION
A125-2	Flanges with ANSI (ASA) 125 bolt holes for 2-way valves 2FGA.B, 2FGB, 2FGB.B, 2FSA (DN50 to65), 2FSA.B (DN50 to 80), 2FGA (DN25, 32, 50, 65)
A125-3	Flanges with ANSI (ASA) 125 bolt holes for 3-way valves 3FGB, 3FSA (DN50 to 65)
A150-2	Flanges with ANSI (ASA) 150 bolt holes for 2-way valves 2FAA150B, 2FSA (DN50 to 65), 2FSA.B (DN50 to 80), 2FAA.B (DN50 to 125), 2FAA (DN32 to 65)
A150-3	Flanges with ANSI (ASA) 150 bolt holes for 3-way valves 3FAA (DN50 to 125), 3FSA (DN50 to 65)
A300-2	Flanges with ANSI (ASA) 300 bolt holes for 2-way valves 2FSA, 2FSA.B, 2FAA.B (DN32 to 65 and DN100 to 125), 2FAA (DN15 and DN32 to 65)
A300-3	Flanges with ANSI (ASA) 300 bolt holes for 3FSA, 3FAA (DN32 to 65 and DN100 to 125)v

Valve Sizing
Software assistant to choose the correct valve size for: water, superheated water, saturated steam and thermal oil.

Available on our web site www.controlli.eu

MODEL	DESCRIPTION
GMVE	Insulation jackets (2x shell with Velcro strips) for MVE actuators
GMVES	Insulation jackets (2x shell with Velcro strips) for MVE_S actuators (short yoke)
GMVH	Insulation jackets (2x shell with Velcro strips) for MVH actuators
GMVHA	Insulation jackets (2x shell with Velcro strips) for MVH56FA actuator
GMVHC	Insulation jackets (2x shell with Velcro strips) for MVH5FC actuators

For a proper valve selection we need to define:

- Hydraulic circuit: constant flow (3-way) or variable flow (2-way)
- Max Hydraulic pressure for the circuit -- > PN
- Maximum and minimum fluid temperature
- Fluid type (e.g. water, water+glycol, steam, thermal oil, ...)
- Valve function: on/off control, linear flow control or EQM flow control.

Once we have identified the type of valve, we need to select its size and the actuator that will motorize it.

To select the correct type and size of valve the following factors need to be taken into consideration:

- Max working pressure to select the proper PN
- Max temperature and type of fluid
- Max differential pressure achievable by the valve/actuator assembly
- Pressure drop as a consequence of the flow rate
- Flow characteristic, Rangeability, Authority

Each valve is identified by its FLOW COEFFICIENT called Kvs. Kvs, in metric system, represents the flow in m3/h of water (specific weight=1) at the temperature of 15.5°C which causes a pressure drop of 1Kg/cm2 (1 bar) when the valve is fully open.
In the USA flow coefficient is called Cv where Kvs = 0.865 Cv
The value of Kvs represents the valve size: -- > **control valves size needs to be chosen according to the calculated Kvs and not according to the pipe size.**
For calculating the Kvs, we need to know: flow rate and differential pressure. Differential pressure can be selected equal to the pressure drop in the heat exchanger.
Kvs can be calculated:

- using the appropriate formulas available on page 54 for water or steam;
- using the diagrams on pages 52 and 53;
- using our dedicated software for PC (available online).

Each type of valve is subject to a max pressure value = nominal working pressure, indicated by PN (Kg/cm2) depending on valve raw material.
The max differential pressure value represents the max differential pressure between inlet and outlet of the valve, when the valve is fully closed.
This value depends on both the actuator power, which must provide full opening and full closing, and on the mechanical-structural limitations of the valve, as construction type and valve body material, stem and plug type and material, stem packing, etc.

After having selected the necessary Kvs value, we should select the size of the valve matching a Kvs value as close as possible to the calculated Kvs.
The identified valve size can achieve several values of max. differential pressure according to the actuator.
Max. differential values are listed in columns in the previous pages of this book.
The actuator needs to be selected in terms of force as to:

- guarantee the effective differential pressure across the valve in case of a 3way valve;
- guarantee the effective differential pressure across the valve and the maximum pressure, at the inlet port of the valve, available from the pump, in case of 2way valves. Consequently 2way valves usually require actuators stronger than those necessary for 3way valves.

As a consequence of the differential pressure across the valve the flow is always trying to open the valve.
To keep the plug in the closed position the actuator must exceed this force (close-off pressure).
Depending on the valve size and on the differential pressure across the valve we need to select an actuator with a close-off higher than the differential pressure.
The larger is the valve the more is the force that the actuator needs to have to achieve the close-off.
For 2-way valves with high differential pressure we recommend using our pressure balanced plug valves 2TGA.B (from ¾" to 2" -- > page 21) and 2FGB.B, 2FSA.B, 2FAA.B, 2FGA200B (from DN65 to 200 -- > page 25).
This is a cost effective alternative to selecting a standard valve with a strong actuator.

Complete details of differential pressure values for all our valves are listed in our data sheet Valves_DBL337E.pdf available online on our web site

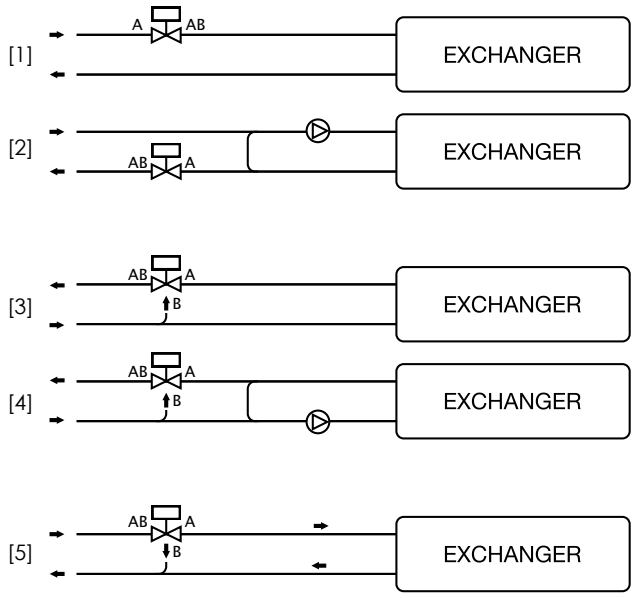

[1] 2-way valve: variable flow to the heat exchanger
[2] 2-way valve: constant flow to the heat exchanger
[3] 3-way valve MIXING: variable flow to the heat exchanger
[4] 3-way valve MIXING: constant flow to the heat exchanger
[5] 3-way valve DIVERTING: variable flow to the heat exchanger

We recommend using our 3way valves as mixing, when used as diverting max. differential pressure has to be limited to the 40% of the values listed in our data sheets. If used as diverting, inlet port is AB.

Butterfly Valves

Series VFA - The valves are ready for mounting on MDA actuators.
They can also be motorized by MDL actuators (page 44) by means of AF24 and AF25 adapters.

MODEL	DN	Kvs	MAX DIFFERENTIAL PRESSURE bar		OTHER FEATURES
			MDA22/42/52	MDA24/44/54	
			MDL24/44/54 20Nm	MDL 26/46/56 30Nm	
VFA (PN16)	25	26	6	-	- Spheroidal cast-iron body (EN-JS1030) - Shaft tight O-Ring - Seat EPDM - Fluid temp.: -10 to 100°C - Close-off leakage: leakage rate A (DIN EN 12266-1)
	32	27		-	
	40	50		-	
	50	116		-	
	65	259		-	
	80	377		-	
	100	763		-	
	125	1030	-	6	
	150	1790	-	3	
	200	3460	-		

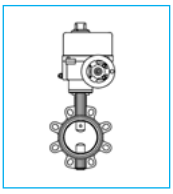

MORE OPTIONS

Larger motorized butterfly valves from DN250 to DN500 available on request.

Shoe Valves

Series M - Cast-iron PN6 - To be motorised by MDB24-44-54 actuators, fitted with AM72.

MODEL	TYPE	DN	Kvs	MAX DIFFERENTIAL PRESSURE bar	OTHER FEATURES
M31P	M3 (PN6) threaded	1"	30	1	- THREE-WAY - PN 6 cast-iron valve body - Female threaded connections - Outlet from angle-way - Fluid temperature: 110 °C max
M31P1/4		11/4"	37	1	
M31P1/2		11/2"	38	1	
M32P		2"	45	1	
M340	M3 (PN6) flanged	40	38	1	As above, with flanged connections
M350		50	70	1	
M365		65	80	0.8	
M380		80	90	0.5	
M3100		100	110	0.3	
M3125		125	120	0.2	
M41P	M4 (PN6) threaded	1"	30	1	- FOUR-WAY PN 6 cast-iron valve body - Female threaded connections - Fluid temperature: 110 °C max
M41P1/4		11/4"	37	1	
M41P1/2		11/2"	40	1	
M42P		2"	45	1	
M450	M4 (PN6) flanged	50	70	1	As above, with flanged connections
M465		65	80	1	
M480		80	90	0.8	
M4100		100	110	0.3	

Actuators for Butterfly valves, dampers, burners

Series MDL - Bidirectional motor- Input signal P.C. board - Power consumption 12VA - 2 output shafts: main and secondary shaft Ø 9.5 x 9.5 mm - MDL30-50 angular travel set at 90°adjustable between 55 and 160°- MDL20-40-60 angular travel set at 90°adjustable between 0 and 160° - Force 500 N - Manual override - IP 55.

MODEL	TIMING (s. FOR 90°)	TORQUE Nm	ADJUSTABLE ANGULAR TRAVEL	SUPPLY Vac	MAX DAMPER SURFACE m²	ACTION
MDL22	15 - 27	6	0 to 160	230	1.2	on/off, floating
MDL24	45 - 80	20	0 to 160	230	4	"
MDL26	60 - 107	30	0 to 160	230	6	"
MDL42	15 - 27	6	0 to 160	24	1.2	"
MDL44	45 - 80	20	0 to 160	24	4	"
MDL46	60 - 107	30	0 to 160	24	6	"
MDL62	15 - 27	6	0 to 160	110	1.2	"
MDL64	45 - 80	20	0 to 160	110	4	"
MDL66	60 - 107	30	0 to 160	110	6	"
MDL32	15 - 27	6	55 to 160	24	1.2	proportional-potentiometric (165 Ohm)
MDL34	45 - 80	20	55 to 160	24	4	
MDL36	60 - 107	30	55 to 160	24	6	
MDL52	15 - 27	6	55 to 160	24	1.2	Vdc/current proportional control. Ranges: 6 to 9, 4 to 7, 8 to 11, 0 to 10, 1 to 5 Vdc, or current 4 to 20 mA
MDL54	45 - 80	20	55 to 160	24	4	
MDL56	60 - 107	30	55 to 160	24	6	

- *VARIANTS: in case the MDL2./4. actuators are needed to be supplied with 1 KOhm auxiliary potentiometer, add PA2 for MDL2".", PA4 for MDL4"." and PA6 for MDL6".": e.g. MDL24PA2, MDL46PA4 or MDL66PA6. In special applications, the actuators can be supplied with 2 or 3 auxiliary potentiometers.*

Actuators for Butterfly Valves

Series MDA - Bidirectional actuator for VFA butterfly valves - Floating (MDA2.-4.) or proprotional 0-10 V (MDA5.) control signal - Angular stroke 90° - Manual control - Supplied with linkage for mounting on valve body - Protection IP54.

MODEL	TIMING s.	POWEER SUPPLY Vca	TORQUE Nm	OTHER FEATURES
MDA22	90	230	20	For VFA valves up to DN100
MDA24	150		40	For VFA valves from DN125 to DN200
MDA42	90	24	20	For VFA valves up to DN100
MDA44	150		40	For VFA valves from DN125 to DN200
MDA52	90		20	For VFA valves up to DN100
MDA54	150		40	For VFA valves from DN125 to DN200
MDAV1	MDA actuators are supplied NOT mounted on valve bodies. In case the actuator-valve assembly is required, order the specific part number MDAV1 together with the models of actuator and valve body.			
MDAV2	DMDA microswitch assembling on MDA actuator			

Options

MODEL	DESCRIPTION
MDLS5	Electronic card input signal, range 6 to 9, 4 to 7, 8 to 11, 1 to 5 V d.c., 4 to 20 mA for MDL32/34/36
MDLV5	Electronic card input signal, range 0 to 10 V d.c., 4 to 20 mA with adjustable start point and span for MDL32/34/36
DMDL	Two auxiliary microswitches SPDT 10 (3) A - 240 V a.c. adjustable on the whole stroke for MDL
MDLA1	Damper drive linkage for MDL
MDLA2	Linkage for mounting MDL when replacing SL
MDLPA2	Board with 1 K Ohm auxiliary potentiometer for MDL2
MDLPA4	Board with 1 K Ohm auxiliary potentiometer for MDL4
MDLPA6	Board with 1 K Ohm auxiliary potentiometer for MDL6
YS7	Crank-arm in addition to MDLA1 composed of 2 joints and 8-mm rod for dampers with 10 to 18mm shaft with MDL actuator
DMDA	two auxiliary microswitches

Without Spring Return MDB Series. Maximun rotation 95°. For air dampers up to 2sqm. IP54

MODEL	Torque	Power supply	Control action	Micro-switch
MDB42	5 Nm	24 Vac	2-3 pos.	-
MDB42M				2
MDB52			0-10Vdc proportional	-
MDB24	8 Nm	230 Vac	2-3 pos.	-
MDB24M				1
MDB44		24 Vac		-
MDB44M				1
MDB54			0-10Vdc proportional	-
MDB26	15 Nm	230 Vac	2-3 pos.	-
MDB26M				2
MDB46		24 Vac		-
MDB46M				2
MDB56			0-10Vdc proportional	-
MDB28	20 Nm	230 Vac	2-3 pos.	-
MDB28M				2
MDB48		24 Vac		-
MDB48M				2
MDB58			0-10Vdc proportional	-

With Spring Return DuraDrive series. Protection IP54 (for 7-15 Nm only with conduit connector downwards, otherwise IP30).

MODEL	CONTROL SIGNAL	TORQUE Nm	SUPPLY Vac	AUXILIARY MI-CROSWITCH	MAX DAMPER SURFACE m²	TIMING (s. FOR 90°)
MA40-7041-G00	2 pos.	4	230		0.74	50
MA40-7041-G01	2 pos.	4	230	1	0.74	50
MA40-7043-G00	2 pos.	4	24		0.74	50
MA40-7043-G01	2 pos.	4	24	1	0.74	50
MA41-7071-G00	2 pos.	7	230		1.39	80
MA41-7071-G02	2 pos.	7	230	2	1.39	80
MA41-7073-G00	2 pos.	7	24		1.39	80
MA41-7073-G02	2 pos.	7	24	2	1.39	80
MA41-7151-G00	2 pos.	15	230		3.25	190
MA41-7151-G02	2 pos.	15	230	2	3.25	190
MA41-7153-G00	2 pos.	15	24		3.25	190
MA41-7153-G02	2 pos.	15	24	2	3.25	190
MF40-7043-G00	floating	4	24		0.74	130
MF40-7043-G01	floating	4	24	1	0.74	130
MF41-7073-G00	floating	7	24		1.39	195
MF41-7073-G02	floating	7	24	2	1.39	195
MF41-7153-G00	floating	15	24		3.25	190
MF41-7153-G02	floating	15	24	2	3.25	190
MS40-7043-G00	2-10 V	4	24		0.74	130
MS40-7043-G01	2-10 V	4	24	1	0.74	130
MS41-7073-G00	2-10 V	7	24		1.39	195
MS41-7073-G02	2-10 V	7	24	2	1.39	195
MS41-7153-G00	2-10 V	15	24		3.25	190
MS41-7153-G02	2-10 V	15	24	2	3.25	190

4 Nm

7 and 15 Nm

VALVES & ACTUATORS COMPATIBILITY

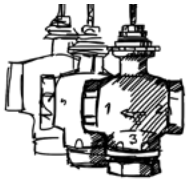

ACTUATORS			MVB		MVE		MVE.R (with emergency return)		MVH			MVH (spring return)
			MVB22 MVB26 MVB28 MVB46	MVB52 MVB56	MVE.06 MVE.10 MVE.15 MVE.22	MVE.06S MVE.10S MVE.15S	MVE.06R MVE.10R MVE.15R	MVE.06SR MVE.10SR MVE.15SR	MVH26 MVH46	MVH36 MVH56	MVH56F MVH3K	MVH56FA MVH56FC
			2 - 3 pos. 24V -230V	prop. 24V	3 pos. & prop. 24V -230V	3 pos. & prop. 24V -230V short bracket	3 pos. & prop. 24V -230V	3 pos. & prop. 24V -230V short bracket	2 - 3 pos. 24V; 230V	Prop. 24V	3 pos.& prop. 24V	3 pos. & prop. 24V
VALVES			450 N		600 N 1000 N 1500 N 2200 N	600 N 1000 N 1500 N	600 N 1000 N 1500 N	600 N 1000 N 1500 N	1500 N	1500 N	1500 N 3000 N	700 N
PN16 THREADED VALVES												
2TGB15B	2 way threaded MVB	DN 1/2"	●	●	-	-	-	-	-	-	-	-
3TGB15B	2 way threaded MVB		●	●	-	-	-	-	-	-	-	-
2TGB15F	2 way threaded MVE.S	DN 1/2"	-	-	-	●	-	●	-	-	-	-
3TGB15F	2 way threaded MVE.S		-	-	-	●	-	●	-	-	-	-
VSB	2 way threaded	DN 3/4" - 2"	●	●	● with AG52	● with AG63	● with AG52	● with AG63	● with AG62	● with AG62	● with AG62	● with AG62
VMB	3 way threaded		●	●	● with AG52	● with AG63	● with AG52	● with AG63	● with AG62	● with AG62	● with AG62	● with AG62
VSBP. M	2 way threaded tight close-off	DN 3/4" - 2"	●	●	-	-	-	-	-	-	-	-
VMBP. M	3 way threaded tight close-off		●	●	-	-	-	-	-	-	-	-
2TBB	2 way bronze	DN 1/2" - 2"	-	-	●	● *1	●	● *1	●	●	● no MVH3K	●
3TBB	3 way bronze		-	-	●	● *1	●	● *1	●	●	● no MVH3K	●
PN16 FLANGED VALVES												
VSB. F	2-way slip on flanges	DN 20 - 50	●	●	● with AG52	● with AG63	● with AG52	● with AG63	● with AG62	● with AG62	● with AG62	● with AG62
VMB. F	3-way slip on flanges		●	●	● with AG52	● with AG63	● with AG52	● with AG63	● with AG62	● with AG62	● with AG62	● with AG62
PN16, 25, 40 FLANGED VALVES												
2FGB	2 way flanged valves PN16	DN 25-150	-	-	●	-	●	-	●	●	●	●
3FGB	3 way flanged valves PN16		-	-	●	-	●	-	●	●	●	●
2FGA	2 way flanged valves PN16	DN 15-100	-	-	●	-	●	-	●	●	●	●
2FSA	2 way flanged valves PN25	DN 25-65	-	-	●	-	●	-	●	●	●	●
3FSA *2	3 way flanged valves PN25	DN 25-80	-	-	●	-	●	-	●	●	●	●
2FAA *2	2 way flanged valves PN40	DN 15-80	-	-	●	-	●	-	●	●	●	●
3FAA *2	3 way flanged valves PN40	DN 25-125	-	-	●	-	●	-	●	●	●	●
PN16, 25, 40 FLANGED VALVES FOR HIGH CLOSE-OFF PRESSURE												
2FGB.B	2 way flanged valves PN16	DN 65-150	-	-	●	-	●	-	●	●	●	●
2FSA.B	2 way flanged valves PN25	DN 25-80	-	-	●	-	●	-	●	●	●	●
2FAA.B	2 way flanged valves PN40	DN 25-125	-	-	●	-	●	-	●	●	●	●
2FAA150B	2 way double seat PN25	DN150	-	-	●	-	●	-	●	●	●	●
2FGA200B	2 way double seat PN16	DN200	-	-	●	-	●	-	●	●	●	●

*1 - Available on request *2 - Also 2FAA.P, 2FAA.T, 3FAA.P, 3FAA.T, 3FSA.S

VALVES		ACTUATORS	MVT							MVX				MCA
			MVT28 MVT44	MVT56 MVT57	MVT56L	MVT203S MVT403S	MVT503S	MVT203 MVT403	MVT503	MVX21R MVX41R	MVX57	MVX22R MVX42R	MVX52	MCA
			3 pos. 24V; 230V	prop. 24V	prop. 24V	3 pos. 24V; 230V	prop. 24V	3 pos. 24V; 230V	prop. 24V	2 pos. 24V; 230V	prop. 24V	2 pos. 24V; 230V	prop. 24V	2 pos. 24V; 230V
			200 N			300 N				90 N		140 N		90N/140N
BRASS THREADED VALVES PN16 - KVS 0.25 UP TO 6														
VSXT	2 way	DN 1/2"-3/4"	●	●	-	●	●	-	-	-	-	-	-	-
VMXT	3 way		●	●	-	●	●	-	-	-	-	-	-	-
VTXT	3 way +bypass		●	●	-	●	●	-	-	-	-	-	-	-
BRASS THREADED VALVES PN16 - KVS 0.25 UP TO 2.5														
VSX	2 way	DN 1/2"-3/4"	-	-	-	-	-	-	-	●	●	-	-	● (90N)
VMX	3 way		-	-	-	-	-	-	-	●	●	-	-	● (90N)
VTX	3 way +bypass		-	-	-	-	-	-	-	●	●	-	-	● (90N)
BRASS THREADED VALVES PN16 - KVS 4 UP TO 6														
VSX24-26	2 way	DN 3/4"	-	-	-	-	-	-	-	-	-	●	●	● (140N)
VMX24-26	3 way		-	-	-	-	-	-	-	-	-	●	●	● (140N)
VTX24-26	3 way +bypass		-	-	-	-	-	-	-	-	-	●	●	●(140N)
CAST IRON THREADED VALVES PN16 - KVS 6.3 TO 25														
VSB.T	2 way	DN 3/4"-2"	-	-	-	-	-	●	●	-	-	-	-	-
VMB.T	3 way		-	-	-	-	-	●	●	-	-	-	-	-
2TGA.B	2 way	DN 3/4-2"	●	-	●	●	●	-	-	-	-	-	-	-
2-3TGB15B	2 way / 3 way	DN 1/2"	-	-	-	-	-	● + AG74-03	● + AG74-03	-	-	-	-	-
VSBT.	2 way	DN 3/4"-1 ½"	●	●	-	●	●	-	-	-	-	-	-	-
VMBT.	3 way		●	●	-	●	●	-	-	-	-	-	-	-

VALVES		ACTUATORS	MDA		MDB			MDL	
			MDA2. MDA4.	MDA5.	MDB24	MDB44	MDB54	MDL .4	MDL. 6
			2 - 3 pos. 24V; 230V	prop. 24V	3 pos. 230V	3 pos. 24V	prop. 24V	3 pos. or prop. 24V or 230V	
			20-40 Nm		10 Nm	10 Nm	10 Nm	20Nm	30Nm
BUTTERFLY VALVES PN16									
VFA	BUTTERFLY VALVES PN16	DN 25-200	●	●	-	-	-	● with AF24	● with AF25
SHOE VALVES PN6									
M3	3 way female threaded	DN 1"-2"	-	-	● with AM72	● with AM72	● with AM72	-	-
M4	4 way female threaded		-	-	● with AM72	● with AM72	● with AM72	-	-
M3 flanged	3 way flanged connections	DN 40-125	-	-	● with AM72	● with AM72	● with AM72	-	-
M4 flanged	4 way flanged connections	DN 50-100	-	-	● with AM72	● with AM72	● with AM72	-	-

COMPATIBLE VALVES / LINKAGE KITS

MANUFACTURER	MODEL	WAY	TYPE	MVE	MVH	MVH56FA/C
SCHNEIDER ELECTRIC	V241	2way	threaded	compatible	compatible	compatible
	V211T	2way	threaded	compatible	compatible	compatible
	V212T	2way	threaded	compatible	compatible	compatible
	V211	2way	flanged	compatible	compatible	compatible
	V212	2way	flanged	compatible	compatible	compatible
	VG211	2way	flanged	compatible	compatible	compatible
	VG222	2way	flanged	compatible	compatible	compatible
	V231	2way	flanged	compatible	compatible	compatible
	V232	2way	flanged	compatible	compatible	compatible
	V292	2way	flanged	compatible	compatible	compatible
	V341	3way	threaded	compatible	compatible	compatible
	V311T	3way	threaded	compatible	compatible	compatible
	V311	3way	flanged	compatible	compatible	compatible
	VG321	3way	flanged	compatible	compatible	compatible
	V321	3way	flanged	compatible	compatible	compatible
SATCHWELL	VZ	2way	threaded	AG53	AG54	AG54
	VSF DN15-50	2way	flanged	AG53	AG54	AG54
	VZF DN65 150	2way	flanged	AG53	AG54	AG54
	MZ	3way	threaded	AG53	AG54	AG54
	MJF DN15-50	3way	flanged	AG53	AG54	AG54
	MZF DN 65-150	3way	flanged	AG53	AG54	AG54
HONEYWELL	V176A,B	2way	flanged	AG60-10	X	X
	V5011A	2way	flanged	AG60-10	X	X
SIEMENS	VVF21 DN 25..80	2way	flanged	AG70-10	AG70-10	AG70-10
	VVF21DN ≥100	2way	flanged	AG70-14	AG70-14	AG70-14
	VVF31 DN 15..80	2way	flanged	AG70-10	AG70-10	AG70-10
	VVF31DN 150	2way	flanged	AG70-14	AG70-14	AG70-14
	VVF40 DN 15..80	2way	flanged	AG70-10	AG70-10	AG70-10
	VVF40 DN 150	2way	flanged	AG70-14	AG70-14	AG70-14
	VVF41 DN 50	2way	flanged	AG70-14	AG70-14	AG70-14
	VVF41 DN 65..150	2way	flanged	AG70-14	AG70-14	AG70-14
	VVF45 DN 50	2way	flanged	AG70-14	AG70-14	AG70-14
	VVF45 DN65..150	2way	flanged	AG70-14	AG70-14	AG70-14
	VVF51DN15..40	2way	flanged	AG70-10	AG70-10	AG70-10
	VVF52 DN 15..40	2way	flanged	AG70-10	AG70-10	AG70-10
	VVF53 DN 15..50	2way	flanged	AG70-10	AG70-10	AG70-10
	VVF53 DN 65..150	2way	flanged	AG70-10	AG70-10	AG70-10
	VVF61 DN 15..25	2way	flanged	AG70-10	AG70-10	AG70-10
	VVF61 DN 40..50	2way	flanged	AG70-14	AG70-14	AG70-14
	VVF61 DN 65..150	2way	flanged	AG70-14	AG70-14	AG70-14
	VVF61_2 DN 15..50	2way	flanged	AG70-10	AG70-10	AG70-10
	VVF61_2 DN 65..150	2way	flanged	AG70-10	AG70-10	AG70-10
	VVG41 DN 15.50	2way	threaded	AG70-10	AG70-10	AG70-10
	VVG11 DN 25..40	2way	threaded	AG70-10	AG70-10	AG70-10
	VXF21DN 25..80	3way	flanged	AG70-10	AG70-10	AG70-10
	VXF21DN 100	3way	flanged	AG70-14	AG70-14	AG70-14

SIEMENS	VXF31 DN 15..80	3way	flanged	AG70-10	AG70-10	AG70-10
	VXF31 DN 100..150	3way	flanged	AG70-14	AG70-14	AG70-14
	VXF40 DN 15..80	3way	flanged	AG70-10	AG70-10	AG70-10
	VXF40 DN 100..150	3way	flanged	AG70-14	AG70-14	AG70-14
	VXF41 DN 50	3way	flanged	AG70-14	AG70-14	AG70-14
	VXF41 DN 65..150	3way	flanged	AG70-14	AG70-14	AG70-14
	VXF45 DN 50	3way	flanged	AG70-14	AG70-14	AG70-14
	VXF45 DN 65..150	3way	flanged	AG70-14	AG70-14	AG70-14
	VXF51 DN 15..40	3way	flanged	AG70-10	AG70-10	AG70-10
	VXF52 DN 15..40	3way	flanged	AG70-10	AG70-10	AG70-10
	VXF53 DN 15..50	3way	flanged	AG70-10	AG70-10	AG70-10
	VXF53 DN 65..150	3way	flanged	AG70-10	AG70-10	AG70-10
	VXF61 DN 15..25	3way	flanged	AG70-10	AG70-10	AG70-10
	VXF61 DN 40..50	3way	flanged	AG70-14	AG70-14	AG70-14
	VXF61 DN 65..150	3way	flanged	AG70-14	AG70-14	AG70-14
	VXF61_2 DN 15..50	3way	flanged	AG70-10	AG70-10	AG70-10
	VXF61_2 DN 65..150	3way	flanged	AG70-10	AG70-10	AG70-10
	VXG41 DN 15..50	3way	threaded	AG70-10	AG70-10	AG70-10
	VXG11 DN 25..40	3way	threaded	AG70-10	AG70-10	AG70-10
BELIMO	H6..N DN 15..100	2 way	flanged	AG70-10	x	x
	H7..N DN 15..100	3 way	flanged	AG70-10	x	x
JOHNSON CONTROLS	VB7816	3way	threaded	AG66	x	x
DANFOSS	VF2	2way	flanged	AG60-07	x	x
	VF3	3way	flanged	AG60-07	x	x
MUT	MK DN50 - 150	3way	flanged	AG69	x	x

x = link not available

2F & 3F VALVES CROSS REFERENCE WITH OLD CONTROLLI VALVES

	OLD MODEL	NEW MODEL
2-way valves PN40		
Steel valves	SSAA15R	2FAA15R2
	SSAA15	2FAA15
	SSAA20	2FAA20
	SSAA25	2FAA25
	SSAA32	2FAA32
	SSAA40	2FAA40
	SSAA50	2FAA50
	SSAA65	2FAA65
	SSAA80	2FAA80
Steel valves for very high temperatures	SSAACP15R	2FAA15PR2
	SSAACP15	2FAA15P
	SSAACP20	2FAA20P
	SSAACP25	2FAA25P
	SSAACP32	2FAA32P
	SSAACP40	2FAA40P
	SSAACP50	2FAA50P
	SSAACP65	2FAA65P
	SSAACP80	2FAA80P
Steel valves for very low temperatures	SSAACP15RB	2FAA15TR2
	SSAACP15B	2FAA15T
	SSAACP20B	2FAA20T
	SSAACP25B	2FAA25T
	SSAACP32B	2FAA32T
	SSAACP40B	2FAA40T
	SSAACP50B	2FAA50T
	SSAACP65B	2FAA65T
	SSAACP80B	2FAA80T
Balanced plug valves	VBAA25	2FAA25B
	VBAA32	2FAA32B
	VBAA40	2FAA40B
	VBAA50	2FAA50B
	VBAA65	2FAA65B
	VBAA80	2FAA80B
	VBAA100	2FAA100B
	VBAA125	2FAA125B

	OLD MODEL	NEW MODEL
3-way valves PN25		
Spheroidal cast iron valves	VMS25R	3FSA25R4
	VMS25I	3FSA25R7
	VMS25	3FSA25
	VMS32	3FSA32
	VMS40	3FSA40
	VMS50	3FSA50
	VMS65	3FSA65
	3VSA80	3FSA80
High temperature valves	VMSTS25R	3FSA25SR4
	VMSTS25I	3FSA25SR7
	VMSTS25	3FSA25S
	VMSTS32	3FSA32S
	VMSTS40	3FSA40S
	VMSTS50	3FSA50S
	VMSTS65	3FSA65S
	3VSATS80	3FSA80S

	OLD MODEL	NEW MODEL
2-way valves PN16		
Cast iron valves with s/steel internal parts	SSGA11	2FGA15R0
	SSGA12	2FGA15R1
	SSGA15R	2FGA15R2
	SSGA1	2FGA15R3
	SSGA15	2FGA15
	SSGA20	2FGA20
	SSGA25	2FGA25
	SSGA32	2FGA32
	SSGA40	2FGA40
	SSGA50	2FGA50
	SSGA65	2FGA65
	SSGA80	2FGA80
	SSGA100	2FGA100
Cast iron valves	VSG25R	2FGB25R4
	VSG25I	2FGB25R7
	VSG25	2FGB25
	VSG40	2FGB40
	VSG50	2FGB50
	VSG65	2FGB65
	VSG80	2FGB80
	VSG100	2FGB100
	VSG125	2FGB125
	VSG150	2FGB150
Balanced plug valves	VBG65	2FGB65B
	VBG80	2FGB80B
	VBG100	2FGB100B
	VBG125	2FGB125B
	VBG150	2FGB150B
	DSGA200	2FGA200B

	OLD MODEL	NEW MODEL
3-way valves PN16		
Cast iron valves	VMB1625R	3FGB25R4
	VMB1625I	3FGB25R7
	VMB1625	3FGB25
	VMB1640R	3FGB40R19
	VMB1640	3FGB40
	VMB1650	3FGB50
	VMB1665	3FGB65
	VMB1680	3FGB80
	VMB16100	3FGB100
	VMB16125	3FGB125
	VMB16150	3FGB150

	OLD MODEL	NEW MODEL
2-way valves PN25		
Spheroidal cast iron valves	VSS25R	2FSA25R4
	VSS25I	2FSA25R7
	VSS25	2FSA25
	VSS32	2FSA32
	VSS40	2FSA40
	VSS50	2FSA50
	VSS65	2FSA65
Balanced plug valves	VBS25R	2FSA25BR4
	VBS25I	2FSA25BR7
	VBS25	2FSA25B
	VBS32	2FSA32B
	VBS40	2FSA40B
	VBS50	2FSA50B
	VBS65	2FSA65B
	VBS80	2FSA80B
	DSAA150	2FAA150B

	OLD MODEL	NEW MODEL
3-way valves PN40		
Steel valves	3VAA25R	3FAA25R4
	3VAA25I	3FAA25R7
	3VAA25	3FAA25
	3VAA32	3FAA32
	3VAA40	3FAA40
	3VAA50	3FAA50
	3VAA65	3FAA65
	3VAA80	3FAA80
	3VAA100	3FAA100
	3VAA125	3FAA125
Steel valves for very high temperatures	3VAACP25R	3FAA25PR4
	3VAACP25I	3FAA25PR7
	3VAACP25	3FAA25P
	3VAACP32	3FAA32P
	3VAACP40	3FAA40P
	3VAACP50	3FAA50P
	3VAACP65	3FAA65P
	3VAACP80	3FAA80P
	3VAACP100	3FAA100P
	3VAACP125	3FAA125P
Steel valves for very low temperatures	3VAACP25RB	3FAA25TR4
	3VAACP25IB	3FAA25TR7
	3VAACP25B	3FAA25T
	3VAACP32B	3FAA32T
	3VAACP40B	3FAA40T
	3VAACP50B	3FAA50T
	3VAACP65B	3FAA65T
	3VAACP80B	3FAA80T
	3VAACP100B	3FAA100T
	3VAACP125B	3FAA125T

OLD MODEL	NEW MODEL	
ACCESSORIES USED ON OLD MVL-SH ACTUATORS	CORRESPONDING ACCESSORIES WHEN USING MVH-MVE ACTUATORS	DESCRIPTION
245	248	Stem heater for MVH-MVE with flanged valves
245F		
246	244	Stem heater for MVH-MVE with VSB-VMB-VSBF-VMBF valves
AG31	AG62	Linkage for MVH actuators with VSB-VMB-VSBF-VMBF valves
DMVL	DMVH	Aux. microswitches for MVH
MVLFS5	MVHFS5	4-20 mA input signal
MVLPA2	MVHPA2	1kOhm aux. potentiometer for MVH26
MVLPA4	MVHPA4	1kOhm aux. potentiometer for MVH46
MVLHT	MVHT	High temperature spacer

REPLACING OLD CONTROLLI ACTUATORS

In the event of replacing an old Controlli actuator mounted on one of the old valves listed below, here is the equivalent MVH actuator model to be used:

OLD MODEL		NEW MODEL		LINKAGE KIT
SH242		MVH26		
SH222		MVH46		
SH522		MVH56		
MVL26		MVH26		
MVL36		MVH36		
MVL46		MVH46	+	AG51 / AG62
MVL56		MVH56		
MVL56F		MVH56F		
MVL56A / MVL56FA/MVL46A	=	MVH56FA		
MVL56C / MVL56FC/MVL46C		MVH56FC		
MVL3K		MVH3K		
MVF54		MVE506		
MVF58		MVE510		
MVF515		MVE515		WITHOUT LINKAGE KIT
MVF54S		MVE506S		
MVF58S		MVE510S		
MVF515S		MVE515S		

LINKAGE KITS FOR

MVH, MVE, MVB ACTUATORS

CONTROLLI VALVES MODELS	MVH	MVE	MVB
OBSOLETE MODELS			
S300	x	x	AG40
V500	x	x	AG22
OLD FLANGED VALVES			
VSG, VMB16, VBG, SS, DS, VSS, VBS, VBAA, 3V, VMS	AG51		x
SS, DS, VS, VBS, 3V, VM + MVLHT DN15÷65mm	AG64	x	x
SS, DS, VS, VBS, 3V, VM + MVLHT DN80÷200mm	AG65	x	x
EXISTING THREADED VALVES			
2TGB.B, 3TGB.B	x	x	compatible
2TGB.F, 3TGB.F	x	compatible	x
VSB, VMB	AG62	AG52/53*	compatible
EXSISTING VALVES WITH SLIP-ON FLANGES			
VSB_F, VMB_F	AG62	AG52	compatible
EXSISTING FLANGED VALVES			
2F, 3F	compatible	compatible	x

*AG52 (MVE) & AG53(MVE.S)

Valve Sizing Diagram for Fluids

$$Kvs = \frac{Q10}{\sqrt{\Delta pv}}$$

Q = flow rate in m³/h
Δpv = pressure drop in kPa

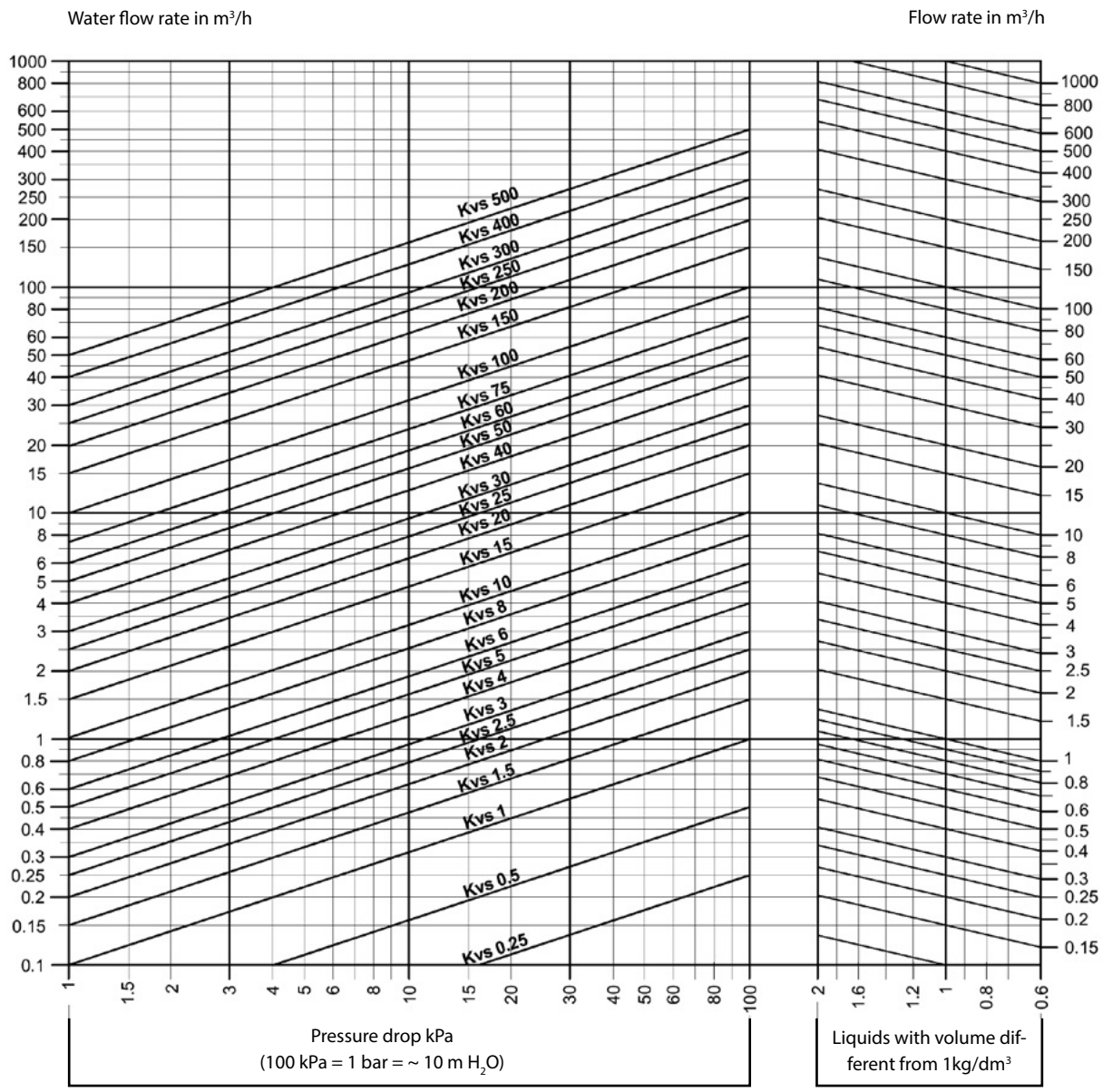

The recommended valve pressure drop must be at least equal to the load.
Example for fluids with relative density1 kg/dm³ (water)
In order to size a control valve with:
FLOW RATE: 7.5 m³/h of water
PRESSURE DROP: 55 kPa
Use the diagram as follows:
- Identify the crossing point between the line starting from the flow rate value (7.5 m³/h) and from the pressure drop value (55 kPa).

This point corresponds to the required flow coefficient, i.e. Kvs 10. Therefore, the control valve must have Kvs 10.
Example for liquids having relative density different from 1 kg/dm³
In order to size a control valve with:
FLOW RATE : 150 m³/h having (0.9 kg/dm³) relative density
PRESSURE DROP: 80 kPa

Use the diagram as follows:
Identify the crossing point (right side of the diagram) between the line starting from the relative density value (0.9 kg/dm³) and the inclined line starting from the flow rate value (150 m³/h).
Identify the crossing point between the line starting from the crossing point above and the other from the pressure drop value (80 kPa).
This point corresponds to the required flow coefficient. Therefore, the control valve must have approximately kvs 160.
Example with diathermic oil.
It could be convenient to size the valve on diathermic oil using the water diagram. To do this, it is necessary to apply the following conversion formula, which takes into account the mass and the "average" specific heat of diathermic oil:

$$Q = \frac{K\ calories}{\Delta t\ 500} \text{ in m}^3\text{/h} = \text{water}$$

Valve Sizing Diagram for Steam

$$Kvs = \frac{Q}{22.8 \cdot \sqrt{\Delta pv \cdot Pu}}$$

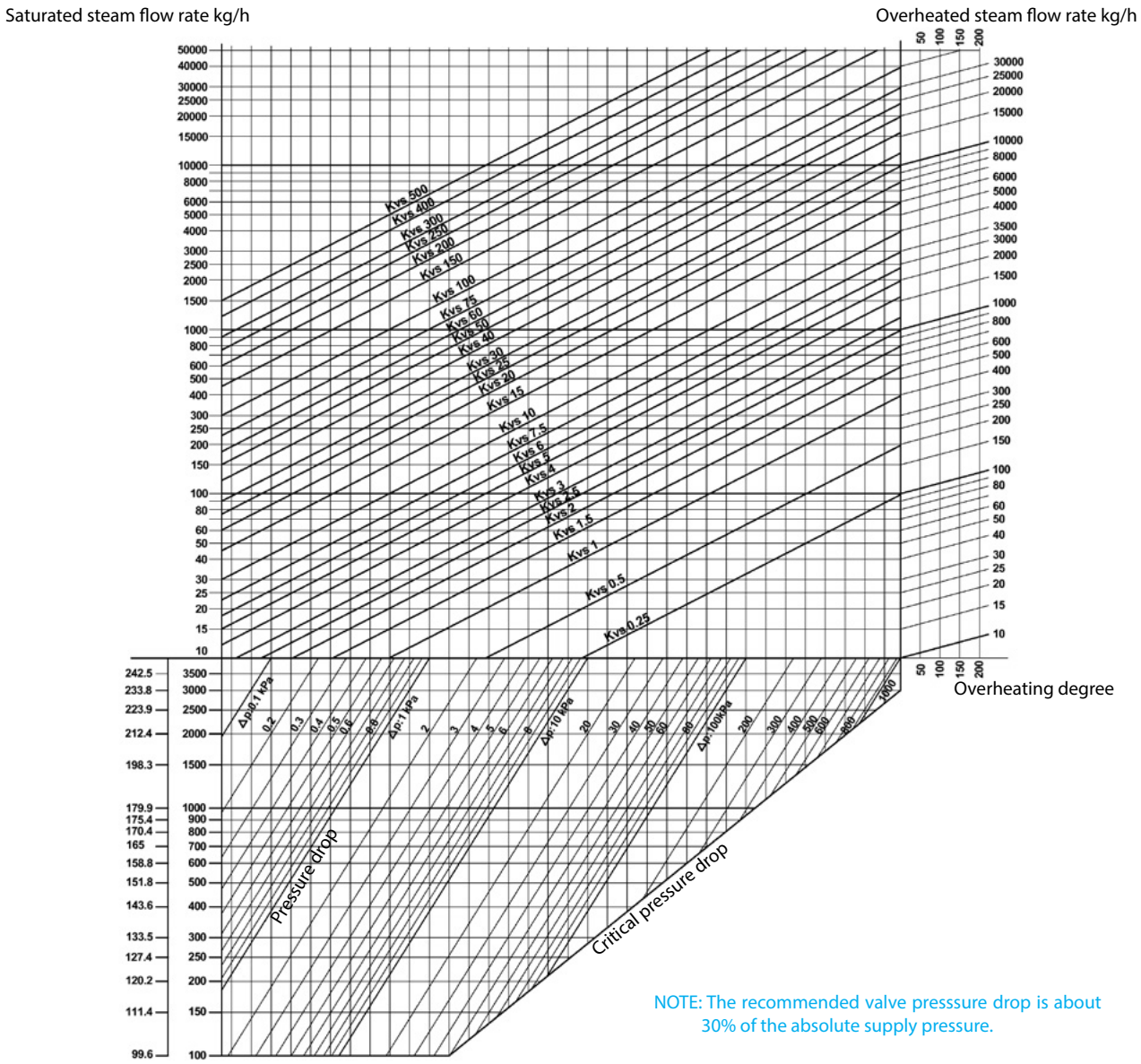

NOTE: The recommended valve presssure drop is about 30% of the absolute supply pressure.

Example for saturated steam:

FLOW RATE:	4700 Kg/h of saturated steam
ABSOLUTE PRESSURE UPSTREAM:	850 kPa
PRESSURE DROP:	160 kPa

Use the diagram as follows:

- Identify the crossing point between the line starting from absolute pressure upstream the valve (850 kPa) and the inclined line corresponding to the pressure drop value (160 kPa).
- Identify the crossing point between the line starting from the crossing point above and the line from the flow rate value (4700 Kg/h).

This point corresponds to the required flow rate coefficient: Kvs 63.

Example for overheated steam:

FLOW RATE:	140 Kg/h of overheated steam
ABSOLUTE PRESSURE UPSTREAM:	350 kPa
TEMPERATURE:	209 °C
PRESSURE DROP:	100 kPa

Calculate the overheating degree of steam as follows:

- On the left side of the diagram, read the temperature value corresponding to 350 kPa (139 °C). The overheating degree is: 209 – 139 = 70 °C

Use the diagram as follows:

- Identify the crossing point "A" (right side of the diagram) between the line starting from the overheating value (70 °C) and the inclined line corresponding to the flow rate value (140 Kg/h).
- Identify the crossing point "B" between the line starting from the value of pressure upstream (350 kPa) and the inclined line corresponding to the value of pressure drop (100 kPa).
- Identify the crossing point between the line starting from the points "A" and "B".

How to Calculate Kvs

Flow coefficient Kvs is the flow rate of water in m^3/h passing through a fully open valve at a 100 kPa pressure drop.

a) Liquids $kvs = 10 \times Q \times \sqrt{\frac{r}{Dp}}$

Q = flow rate m^3/h
Dp = pressure drop (kPa)
r = relative density

The Dp pressure drop should be determined as follows:
- Equal or higher than the Dp of the circuit under control, in case of variable flow applications
- Equal or higher than the Dp of the supply circuit, in case of constant flow applications

b) Steam $kvs = \frac{100 \times G \times C}{20.3 \sqrt{P_2 \times Dpv}}$

G = flow rate (kg/h)
C = 1 + 0.0013 (t-ts)
t = steam temperature in working conditions
ts = saturated steam temperature at P_2 pressure
P_2 = pressure downstream (kPa)
Dpv = pressure drop (kPa)

Choose the valve with the Kvs closest to the calculated one.

Water Systems

Two-way valve

For this application the pressure drop through the valve must be high, in order to have a good control flow characteristic and a properly working system.

1) The valve pressure drop must be 30 to 50% of the pressure upstream the valve.
2) The valve pressure drop must be equal to, or higher than the pressure drop of the coil or heat exchanger under control, in particular:

TEMPERATURE DROP OF HEAT EXCHANGER	DESIGN OF VALVE PRESSURE DROP
30 °C	Equal to pressure drop of heat exchanger
20 °C	Twice as pressure drop of heat exchanger
10 °C	Three times as pressure drop of heat exchanger

Three- way mixing valve
For mixing valve a high pressure drop is not normally required even when used in primary and secondary water circuits to control supply temperature to users.
As a general rule, the valve must have a pressure drop similar to the one of the heat exchanger.

Three-way diverting valve
Three-way diverting valves are used to control flow to heat exchanger and, therefore, the pressure drop through the valve. For proportional systems it must be high.

Note:
When selecting pressure drop, you must not exceed the above-mentioned values because an undersized valve could produce:
- Noisy operation and vibration of the plug
- Rapid wear of plug and seat due to high speed of the fluid through the valve.

Overheated Water Systems

For this application the valves can be two- or three-way type.
The valve pressure drop must be high, in order to have a good control flow characteristic and a properly working system.
The principles and rules for correct sizing are the same as "WATER SYSTEMS".

Steam Systems

For low pressure steam systems (up to 2 kPa), the pressure drop through the valve must be from 60 to 80 % of the pressure available upstream the valve.

STEAM PRESSURE UPSTREAM THE VALVE	VALVE PRESSURE DROP
0.5 bar (50 kPa)	40 kPa
1.0 bar (100 kPa)	70 kPa

For high pressure steam systems (above 2 bar) the pressure drop through the valve must be from 30 to 40% of the pressure available upstream the valve.

STEAM PRESSURE UPSTREAM THE VALVE	VALVE PRESSURE DROP
200 kPa	80 kPa
600 kPa	200 kPa
1,000 kPa	300 kPa

For on/off valves there are no particular rules to follow: pressure drop may be 10 to 20% of inlet pressure, but the valve is normally pipe sized.

Note:

Do not size valves for high pressure steam with pressure drop higher than 50% of absolute pressure upstream: beyond this percentage thermodynamic problems could affect valve efficiency and life.

Heat Transfer Oil Systems

The most commonly used valve type is three-way with linear characteristics, in order to ensure a constant flow to the boiler by constant speed.

Two-way valves can be used for several low-power users and wherever a balanced-plug valve is mounted between supply and return boiler.

The pressure drop of three-way valves must be at least equal to or higher than the one of the heat exchanger.

For a single user control, the valve must have a pressure drop from 30 to 50% of the system pressure drop.

For two-way valves, see also the "WATER SYSTEMS" section.

NOTE

NOTE

NOTE

Controlli S.p.A.
Via Carlo Levi, 52
16010 Sant' Olcese
Genova
Italy

Tel
+39 010 73 06 229
+39 010 73 06 208
+39 010 73 06 288
+39 010 73 06 296

Download
this catalog
in PDF

CONTROLLI 1936

export@controlli.eu

VAT 01572610994

www.controlli.eu